This is a digital copy of a book that was preserved for generations on library shelves before it was carefully scanned by Google as part of a project to make the world's books discoverable online.

It has survived long enough for the copyright to expire and the book to enter the public domain. A public domain book is one that was never subject to copyright or whose legal copyright term has expired. Whether a book is in the public domain may vary country to country. Public domain books are our gateways to the past, representing a wealth of history, culture and knowledge that's often difficult to discover.

Marks, notations and other marginalia present in the original volume will appear in this file - a reminder of this book's long journey from the publisher to a library and finally to you.

Usage guidelines

Google is proud to partner with libraries to digitize public domain materials and make them widely accessible. Public domain books belong to the public and we are merely their custodians. Nevertheless, this work is expensive, so in order to keep providing this resource, we have taken steps to prevent abuse by commercial parties, including placing technical restrictions on automated querying.

We also ask that you:

+ *Make non-commercial use of the files* We designed Google Book Search for use by individuals, and we request that you use these files for personal, non-commercial purposes.

+ *Refrain from automated querying* Do not send automated queries of any sort to Google's system: If you are conducting research on machine translation, optical character recognition or other areas where access to a large amount of text is helpful, please contact us. We encourage the use of public domain materials for these purposes and may be able to help.

+ *Maintain attribution* The Google "watermark" you see on each file is essential for informing people about this project and helping them find additional materials through Google Book Search. Please do not remove it.

+ *Keep it legal* Whatever your use, remember that you are responsible for ensuring that what you are doing is legal. Do not assume that just because we believe a book is in the public domain for users in the United States, that the work is also in the public domain for users in other countries. Whether a book is still in copyright varies from country to country, and we can't offer guidance on whether any specific use of any specific book is allowed. Please do not assume that a book's appearance in Google Book Search means it can be used in any manner anywhere in the world. Copyright infringement liability can be quite severe.

About Google Book Search

Google's mission is to organize the world's information and to make it universally accessible and useful. Google Book Search helps readers discover the world's books while helping authors and publishers reach new audiences. You can search through the full text of this book on the web at `http://books.google.com/`

B 427623

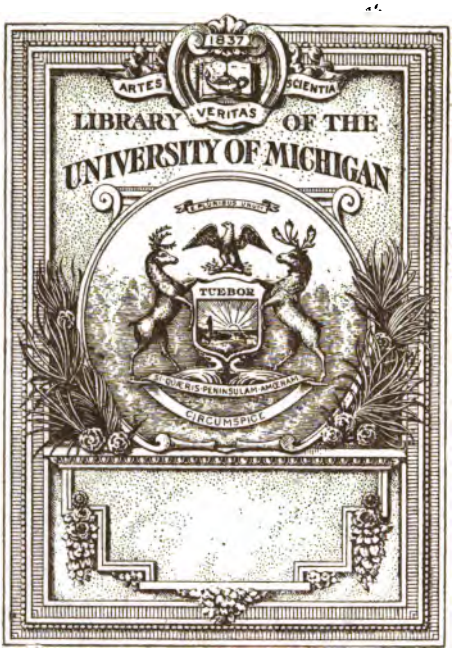
1837
ARTES
SCIENTIA
VERITAS
LIBRARY OF THE
UNIVERSITY OF MICHIGAN
TUEBOR
CIRCUMSPICE

T
353
.F876
1918

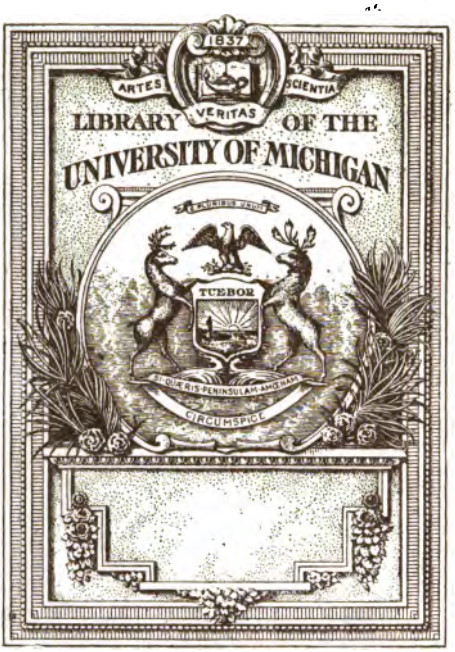
1837
ARTES
VERITAS
SCIENTIA
LIBRARY OF THE
UNIVERSITY OF MICHIGAN
TUEBOR
SI QUAERIS PENINSULAM AMOENAM
CIRCUMSPICE

T
353
.F876
1918

ENGINEERING DRAWING

WORKS BY

THOMAS E. FRENCH

ENGINEERING DRAWING. SECOND EDITION
6×9, 329 pages, 556 Illustrations..... $2.50

BY THOMAS E. FRENCH AND ROBERT MEIKLEJOHN
THE ESSENTIALS OF LETTERING
Oblong, 9×6, 94 pages, 120 Illustrations $1.00

BY THOMAS E. FRENCH AND F. W. IVES
AGRICULTURAL DRAWING AND THE DESIGN OF FARM STRUCTURES
7½×10, 130 pages, 182 Illustrations..... $1.25

A MANUAL

OF

ENGINEERING DRAWING

FOR

STUDENTS AND DRAFTSMEN

BY

THOMAS E. FRENCH, M.E.

PROFESSOR OF ENGINEERING DRAWING, THE OHIO STATE UNIVERSITY
MEMBER AMERICAN SOCIETY OF MECHANICAL ENGINEERS
SOCIETY FOR THE PROMOTION OF ENGINEERING
EDUCATION, ETC.

SECOND EDITION
REVISED AND ENLARGED

THIRD IMPRESSION

McGRAW-HILL BOOK COMPANY, INC.
239 WEST 39TH STREET. NEW YORK

LONDON: HILL PUBLISHING CO., LTD.
6 & 8 BOUVERIE ST., E. C.
1918

COPYRIGHT, 1911, 1918, BY THE

McGRAW-HILL BOOK COMPANY, INC.

FIRST EDITION

First Printing, August, 1911
Second Printing, October, 1911
Third Printing, August, 1912
Fourth Printing, August, 1913
Fifth Printing, March, 1914
Sixth Printing, October, 1914
Seventh Printing, November, 1915
Eighth Printing, September, 1916
Ninth Printing, June, 1917
Tenth Printing, November, 1917

TOTAL ISSUE, 32,500

SECOND EDITION

First Printing, July, 1918
Second Printing, October, 1918
Third Printing, October, 1918

TOTAL ISSUE, 53,000

THE MAPLE PRESS YORK PA

08-26-1918

PREFACE TO SECOND EDITION

The use of this book under varying conditions by over two hundred technical schools has made it possible to obtain a certain amount of constructive criticism. A symposium of this criticism, based on the working use of the book has indicated the desirability of an adequate lettering chapter, and a more extended treatment of working drawings. Numerous other changes and additions thought desirable, have been made.

The important changes and additions are: the new chapter on lettering of twenty-two pages and forty-five illustrations, designed to give a thorough course for engineers, with detailed analysis of the letter forms and discussions of composition of letters and words, and with a carefully graded series of exercises; a separate chapter on screw threads, bolts and fastenings; a rewritten and greatly enlarged chapter on working drawings, with sixty carefully graded problems; a new chapter on structural drawing; an extension of the scope of the chapter on architectural drawing; the addition of new problems in each chapter, with the old ones used redrawn to larger size, and the addition of an appendix containing useful tables and diagrams.

The book as enlarged is adapted for advanced courses in machine drawing, and the group arrangement provides an adequate series of problems for either long or short courses.

Current engineering and drafting room practice is illustrated in the figures and problems, most of which have been adapted from the industries. There is also a rather full consideration of the practical modifications of theory when applied to commercial work, with suggested treatments of many cases which are often perplexing to draftsmen.

The author expresses his appreciation of the assistance of his colleagues, Professor Meiklejohn and Mr. W. B. Field, and especially of the able collaboration of Professor Carl L. Svensen, without whose aid the revision at this time would not have been possible.

COLUMBUS, OHIO.
June 15, 1918.

338488

PREFACE TO FIRST EDITION

There is a wide diversity of method in the teaching of engineering drawing, and perhaps less uniformity in the courses in different schools than would be found in most subjects taught in technical schools and colleges. In some well-known instances the attempt is made to teach the subject by giving a series of plates to be copied by the student. Some give all the time to laboratory work, others depend principally upon recitations and home work. Some begin immediately on the theory of descriptive geometry, working in all the angles, others discard theory and commence with a course in machine detailing. Some advocate the extensive use of models, some condemn their use entirely.

Different courses have been designed for different purposes, and criticism is not intended, but it would seem that better unity of method might result if there were a better recognition of the conception that drawing is a real language, to be studied and taught in the same way as any other language. With this conception it may be seen that except for the practice in the handling and use of instruments, and for showing certain standards of execution, copying drawings does little more in the study as an art of expression of thought than copying paragraphs from a foreign book would do in beginning the study of a foreign language.

And it would appear equally true that good pedagogy would not advise taking up composition in a new language before the simple structure of the sentence is understood and appreciated; that is, "working drawings" would not be considered until after the theory of projection has been explained.

After a knowledge of the technic of expression, the "penmanship and orthography," the whole energy should be directed toward training in constructive imagination, the perceptive ability which enables one to think in three dimensions, to visualize quickly and accurately, to build up a clear mental image, a requirement absolutely necessary for the designer who is to represent his thoughts on paper. That this may be accomplished more readily by taking up solids before points and lines has been demonstrated beyond dispute.

It is then upon this plan, regarding drawing as a language, the universal graphical language of the industrial world, with its varied forms of expression, its grammar and its style, that this book has been built. It is not a "course in drawing," but a

text-book, with exercises and problems in some variety from which selections may be made.

Machine parts furnish the best illustrations of principles, and have been used freely, but the book is intended for all engineering students. Chapters on architectural drawing and map drawing have been added, as in the interrelation of the professions every engineer should be able to read and work from such drawings.

In teaching the subject, part of the time, at least one hour per week, may profitably be scheduled for class lectures, recitations, and blackboard work, at which time there may be distributed "study sheets" or home plates, of problems on the assigned lesson, to be drawn in pencil and returned at the next corresponding period. In the drawing-room period, specifications for plates, to be approved in pencil and some finished by inking or tracing, should be assigned, all to be done under the careful supervision of the instructor.

The judicious use of models is of great aid, both in technical sketching and, particularly, in drawing to scale, in aiding the student to feel the sense of proportion between the drawing and the structure, so that in reading a drawing he may have the ability to visualize not only the shape, but the size of the object represented.

In beginning drawing it is not advisable to use large plates. One set of commercial drafting-room sizes is based on the division of a $36'' \times 48''$ sheet into $24'' \times 36''$, $18'' \times 24''$, $12'' \times 18''$ and $9'' \times 12''$. The size $12'' \times 18''$ is sufficiently large for first year work, while $9'' \times 12''$ is not too small for earlier plates.

Grateful acknowledgment is made of the assistance of Messrs. Robert Meiklejohn, O. E. Williams, A. C. Harper, Cree Sheets, F. W. Ives, W. D. Turnbull, and W. J. Norris of the staff of the Department of Engineering Drawing, Ohio State University, not only in the preparation of the drawings, but in advice and suggestion on the text. Other members of the faculty of this University have aided by helpful criticism.

The aim has been to conform to modern engineering practice, and it is hoped that the practical consideration of the draftsman's needs will give the book permanent value as a reference book in the student's library.

The author will be glad to co-operate with teachers using it as a text-book.

COLUMBUS, OHIO.
May 6, 1911.

CONTENTS

PAGE

PREFACE v

CHAPTER I.—INTRODUCTORY 1
Engineering drawing as a language—Its division into mechanical drawing and technical sketching—Requirements in its study.

CHAPTER II.—THE SELECTION OF INSTRUMENTS 3
Quality—List of instruments and materials for line drawing The pivot joint—Points to observe in selecting instruments—Compasses—Dividers—Ruling pens—Bow instruments—Drawing boards—T-squares—Triangles—Scales—Inks—Pens—Curves—Drawing papers, etc.—Description of special instruments and devices—Railroad pen—Curve pen—Proportional dividers—Beam compasses—Drop pen—Protractor—Section liners—Drafting machines—Vertical drawing boards—Other instruments and appliances.

CHAPTER III.—THE USE OF INSTRUMENTS 18
Good form in drawing—Preparation for drawing—The pencil—The T-square—Laying out the drawing—Use of dividers—To divide a line by trial—Use of the triangles—Use of the compasses—Use of the scale—Inking—Tangent lines and arcs—Faulty lines—The alphabet of lines—Use of the French curve—Exercises—A page of cautions.

CHAPTER IV.—APPLIED GEOMETRY 38
Applications of the principles of geometry in mechanical drawing—To divide a line into any number of parts—To construct a triangle—To transfer a polygon to a new base—To construct a hexagon—To inscribe a regular octagon in a square—To draw a circular arc through three points—To draw an arc tangent to two lines—To draw an ogee curve—To draw a tangent to a circle—To rectify an arc—The conic sections—The ellipse—Methods of drawing the ellipse—Approximate ellipses—The parabola—The rectangular hyperbola—The cycloid—The epicycloid—The hypocycloid—Involutes—The spiral of Archimedes—Problems.

CHAPTER V.—LETTERING 52
Importance—General divisions—Proportions—The rule of stability—Pens for lettering—Materials—Methods of spacing—Position of the pen—Single stroke vertical capitals—Order and direction of strokes—The I H T group—The L E F group—The N Z X Y group—The V A K group—The M W group—The O Q C G group

PAGE

—The D U J group—The P R B group—The S 8 3 group—The 0 6 9 group—The 2 5 7 & group—The fraction group—Vertical lower case—Single stroke inclined capitals—Single stroke inclined lower case—The loop letters—The hook letters—Pumpkin seed letters —Single stroke compressed letters—Composition—Caps and small caps—Title design—Outlined commercial gothic—The Roman letter—Rule for shading—Old Roman—Architects' single stroke —Modern Roman, construction, extended and compressed Roman —Inclined Roman and stump letters—Exercises.

CHAPTER VI.—ORTHOGRAPHIC PROJECTION 73
Definition—The planes of projection—Principles—Note on first angle projection—Writing the language and reading the language—Auxiliary views—Revolution—The true length of a line—Sectional views—Problems, in seven groups.

CHAPTER VII.—DEVELOPED SURFACES AND INTERSECTIONS . . . 97
Classification of surfaces—Developments—Practical considerations —To develop the hexagonal prism—The cylinder—The hexagonal pyramid—The rectangular pyramid—The truncated cone—Triangulation—The oblique cone—Transition pieces—The sphere—The intersection of surfaces—Applications—Two prisms—Two cylinders—Prism and cone—Prism and sphere—The bolt head—Cylinder and cone—Connecting rod end. Problems, in ten groups.

CHAPTER VIII.—PICTORIAL REPRESENTATION. 119
Use of conventional pictorial methods, their advantages, disadvantages and limitations—Isometric drawing—To make an isometric drawing—The boxing method—The offset method—Reversed axes—Isometric sections—Oblique projection—To make an oblique drawing—Rules for placing the object—Cabinet drawing—Axonometric projection—Dimetric system—Clinographic projection and its use in crystallography—Sketching—Problems, in six groups.

CHAPTER IX.—BOLTS, SCREWS, KEYS, RIVETS AND PIPE 140
Fastenings—Forms and proportions of threads—The helix—To draw the projection of a helix—Screw threads—To draw a screw thread—Conventional threads—Bolts and screws—U. S. St'd bolt —To draw a bolt—Studs—Locknuts—S. A. E. St'd bolt—Cap screws—Machine screws—Set screws—Wood screws—Dimensioning and specifying bolts and screws—Rivets—Riveted joints—Keys—Spring cotters—Helical springs—Pipe—Pipe threads—Pipe fittings—Pipe drawings—Problems, in four groups.

CHAPTER X.—WORKING DRAWINGS 160
Description—Classes of working drawings—Assembly drawing—Design drawing—Outline assembly drawing—Assembly working drawings—Detail drawing—Kinds of detail drawings—Number, selection and disposition of views—Source and path of a drawing—

PAGE

Making a working drawing—Order of penciling—Tracing—Order of inking—Dimensioning—General rules for dimensioning—The finish mark—Limits and fits—The metric system—Notes and specifications—The bill of material—Title—Contents of title—Checking—Sections—Revolved and broken out sections—Dotted sections—Violations of theory—Revolved views—Developed views—Symmetrical pieces—Conventional symbols—Conventional breaks—Gears—Information concerning gear teeth—Necessary dimensions—Conventional representation of gears—Cams—To find a cam outline—Commercial practice—Problems, in ten groups.

CHAPTER XI.—TECHNICAL SKETCHING 220
Uses—Necessity to the engineer—Practice—Materials and technic—Making a sketch—Dimensioning a sketch—Measuring—Cross-section paper—Kinds of technical sketches—Classification—Sketching by pictorial methods—Axonometric, oblique, perspective—Principles of perspective—Problems, in three groups.

CHAPTER XII.—THE ELEMENTS OF STRUCTURAL DRAWING 233
Functions of structural drawing—Classification—General drawings—Detail drawings—Structural drawing practice—Dimensioning—Osborn symbols—Erection marks—Timber structures—Masonry structures—Reinforced concrete.

CHAPTER XIII.—THE ELEMENTS OF ARCHITECTURAL DRAWING . . 244
Characteristics of architectural drawing—Kinds of drawings—Preliminary sketching—Display drawings—Rendering—Working drawings—Plans and their symbols—Elevations—Sections—Details—Dimensioning—Details of shop building construction—Drawing a plan—Drawing an elevation—Lettering—Titles.

CHAPTER XIV.—MAP AND TOPOGRAPHICAL DRAWING 261
Classification of maps—Plats—Plat of a survey—Railroad property map—Plats of subdivisions—City plats—Topographical drawing—Contours, hill shading, water-lining—Topographic symbols—Culture, relief, water features, vegetation—Common faults—Government maps—Lettering—Profiles.

CHAPTER XV.—DUPLICATION, AND DRAWING FOR REPRODUCTION . 278
Tracing cloth—Tracing—Blue printing—Formula—To make a blue print—Van Dyke prints—Transparentizing—Blue line prints—Other methods of duplication—Drawing for reproduction—Zinc etching—Halftones—Retouching—"Ben Day" films—Wax process—Lithography.

CHAPTER XVI.—SHADE LINES AND LINE SHADING 288
Shade lines, purpose and uses—Applications—Line shading, theory, practice—Patent Office drawings, requirements and methods of making.

PAGE

CHAPTER XVII.—NOTES ON COMMERCIAL PRACTICE 298
Note book suggestions—To sharpen a pen—Stretching paper—Tinting—Mounting tracing paper—Mounting on cloth, hot mounting, cold mounting—Methods of copying drawings—Pricking—Transfer by rubbing—A glass drawing board—Proportional methods—Pantograph, proportional dividers, proportional squares—Preserving drawings—Various devices.

CHAPTER XVIII.—BIBLIOGRAPHY OF ALLIED SUBJECTS 307
A short classified list of books on allied subjects—Architectural drawing—Descriptive geometry—Gears and gearing—Graphic statics—Handbooks—Lettering—Machine drawing and design—Mechanism—Perspective—Piping—Rendering—Shades and shadows—Sheet metal—Structural drawing and design—Technic and Standards—Topographical drawing.

APPENDIX 311
Tapers—U. S. St'd bolts and nuts—S. A. E. St'd bolts and nuts—Cap screws—Machine screws—Standard wrought pipe—Pipe fittings—Decimal equivalents—Metric equivalents—Wiring symbols—Electrical symbols—Symbols for colors—Symbols for materials—Specification of commercial sizes of materials.

INDEX 321

ENGINEERING DRAWING

CHAPTER I

INTRODUCTORY

By the term Engineering Drawing is meant drawing as used in the industrial world by engineers and designers, as the language in which is expressed and recorded the ideas and information necessary for the building of machines and structures; as distinguished from drawing as a fine art, as practised by artists in pictorial representation.

The artist strives to produce, either from the model or landscape before him, or through his creative imagination, a picture which will impart to the observer something as nearly as may be of the same mental impression as that produced by the object itself, or as that in the artist's mind. As there are no lines in nature, if he is limited in his medium to lines instead of color and light and shade, he is able only to suggest his meaning, and must depend upon the observer's imagination to supply the lack.

The engineering draftsman has a greater task. Limited to outline alone, he may not simply suggest his meaning, but must give exact and positive information regarding every detail of the machine or structure existing in his imagination. Thus drawing to him is more than pictorial representation; it is a complete graphical language, by whose aid he may describe minutely every operation necessary, and may keep a complete record of the work for duplication or repairs.

In the artist's case the result can be understood, in greater or less degree, by any one. The draftsman's result does not show the object as it would appear to the eye when finished, consequently his drawing can be read and understood only by one trained in the language.

Thus as the foundation upon which all designing is based, engineering drawing becomes, with perhaps the exception of

mathematics, the most important single branch of study in a technical school.

When this language is written exactly and accurately, it is done with the aid of mathematical instruments, and is called **mechanical drawing.**[1] When done with the unaided hand, without the assistance of instruments or appliances, it is known as freehand drawing, or **technical sketching.** Training in both these methods is necessary for the engineer, the first to develop accuracy of measurement and manual dexterity, the second to train in comprehensive observation, and to give control and mastery of form and proportion.

Our object then is to study this language so that we may write it, express ourselves clearly to one familiar with it, and may read it readily when written by another. To do this we must know the alphabet, the grammar and the composition, and be familiar with the idioms, the accepted conventions and the abbreviations.

This new language is entirely a graphical or written one. It cannot be read aloud, but is interpreted by forming a mental picture of the subject represented; and the student's success in it will be indicated not alone by his skill in execution, but by his ability to interpret his impressions, to visualize clearly in space.

It is not a language to be learned only by a comparatively few draftsmen, who will be professional writers of it, but should be understood by all connected with or interested in technical industries, and the training its study gives in quick, accurate observation, and the power of reading description from lines, is of a value quite unappreciated by those not familiar with it.

In this study we must first of all become familiar with the technic of expression, and as instruments are used for accurate work, the first requirement is the ability to use these instruments correctly. With continued practice will come a facility in their use which will free the mind from any thought of the means of expression.

[1] The term "Mechanical Drawing" is often applied to all constructive graphics, and, although an unfortunate misnomer, has the sanction of long usage.

CHAPTER II

The Selection of Instruments

In the selection of instruments and material for drawing the only general advice that can be given is to secure the best that can be afforded. For one who expects to do work of professional grade it is a great mistake to buy inferior instruments. Sometimes a beginner is tempted by the suggestion to get cheap instruments for learning, with the expectation of getting better ones later. With reasonable care a set of good instruments will last a lifetime, while poor ones will be an annoyance from the start, and will be worthless after short usage. As good and poor instruments look so much alike that an amateur is unable to distinguish them it is well to have the advice of a competent judge, or to buy only from a trustworthy and experienced dealer.

This chapter will be devoted to a short description of the instruments usually necessary for drawing, and mention of some not in every-day use, but which are of convenience for special work. In this connection, valuable suggestions may be found in the catalogues of the large instrument houses, notably Theo. Alteneder & Sons, Philadelphia; the Keuffel & Esser Co., New York, and the Eugene Dietzgen Co., Chicago.

The following list includes the necessary instruments and materials for ordinary line drawing. The items are numbered for convenience in reference and assignment.

List of Instruments and Materials.—

1. Set of drawing instruments, in case or chamois roll, including at least: 5½-in. compasses, with fixed needle-point leg, pencil, pen and lengthening bar. 5-in. hair-spring dividers; two ruling pens; three bow instruments; box of hard leads.
2. Drawing board.
3. T-square.
4. 45° and 30°–60° triangles.
5. 12-in. mechanical engineer's scale of proportional feet and inches (three flat or one triangular).
6. One doz. thumb tacks.
7. One 6H and one 2H drawing pencil.
8. Pencil pointer.
9. Bottle of drawing ink.
10. Penholder, assorted writing pens, and penwiper.
11. French curves.

12. Pencil eraser.
13. Drawing paper, to suit.
14. Tracing cloth.

To these may be added:

15. Cleaning rubber.
16. Hard Arkansas oil stone.
17. Protractor.
18. Bottle holder.
19. Piece of soapstone.
20. 2-ft. or 4-ft. rule.
21. Sketch book.
22. Erasing shield.
23. Dusting cloth.
24. Lettering triangle.

The student should mark all his instruments and materials plainly with initials or name, as soon as purchased and approved.

1. All modern high-grade instruments are made with some form of "pivot joint," originally invented by Theodore Alteneder in 1850 and again patented in 1871. Before this time, and by other makers during the life of the patent, the heads of compasses and dividers were made with tongue joints, as illustrated in Fig. 1, and many of these old instruments are still in existence.

FIG. 1.—Tongue joint.

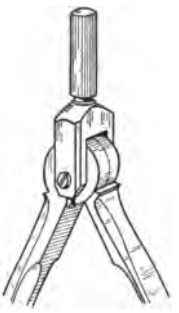

FIG. 2.—Pivot joint (Alteneder).

A modified form of this pin joint is still used for some of the cheap grades of instruments. The objection which led to the abandonment of this form was that the wear of the tongue on the pin gave a lost motion, which may be detected by holding a leg in each hand and moving them slowly back and forth. This jump or lost motion after a time increases to such an extent as to render the instrument unfit for use. The pivot joint, Fig. 2, overcomes this objection by putting the wear on the conical points instead of the through pin.

Since the expiration of the patent all instrument makers have adopted this type of head, and several modifications of the original have been introduced. Sectional views of some different pivot joints are shown in Fig. 3.

The handle attached to the yoke while not essential to the working of the joint is of great convenience. Not all instruments

with handles, however, are pivot-joint instruments. Several straightener devices for keeping the handle erect have been devised, but as they interfere somewhat with the smooth working

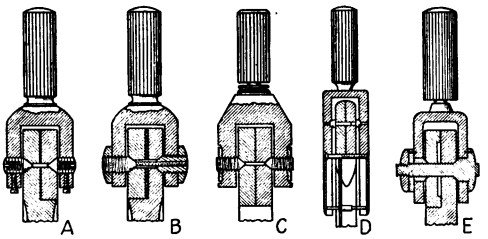

FIG. 3.—Sections of pivot joints.

of the joint, they are not regarded with favor by experienced draftsmen.

There are three different patterns or shapes in which modern compasses are made; the regular or American, the cylindrical

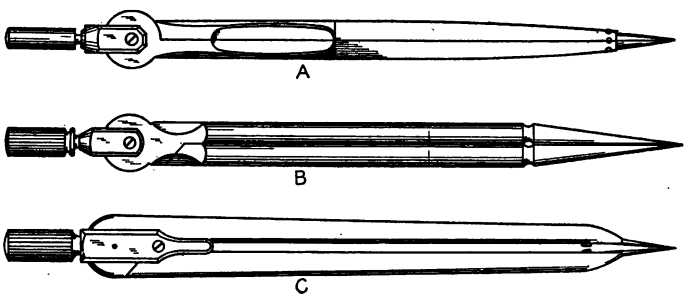

FIG. 4.—The three patterns.

and the flat, Fig. 4. The choice of shapes is entirely a matter of personal preference. After one has become accustomed to the balance and feel of a certain instrument he will not wish to exchange it for another shape.

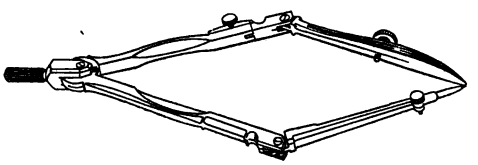

FIG. 5.—Test for alignment.

A favorite instrument with draftsmen, not included in the usual college assortment, is the 3½-inch size compasses with fixed pencil point, and its companion with fixed pen point.

Compasses may be tested for accuracy by bending the knuckle joints and bringing the points together as illustrated in Fig. 5. If out of alignment they should not be accepted.

Dividers are made either "plain," as those in Fig. 4, or "hair-spring," shown in Fig. 6. The latter form, which has one leg with screw adjustment, is occasionally of convenience and should

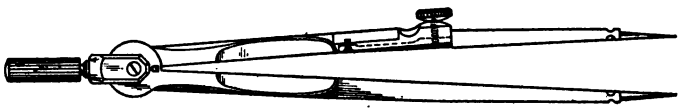

FIG. 6.—Hairspring dividers.

be preferred. Compasses may be had also with hair-spring attachment on the needle-point leg.

Ruling pens (sometimes called right line pens) are made in a variety of forms. An old type has the upper blade hinged for convenience in cleaning. It is open to the serious objection that wear in the joint will throw the nib out of position, and the only

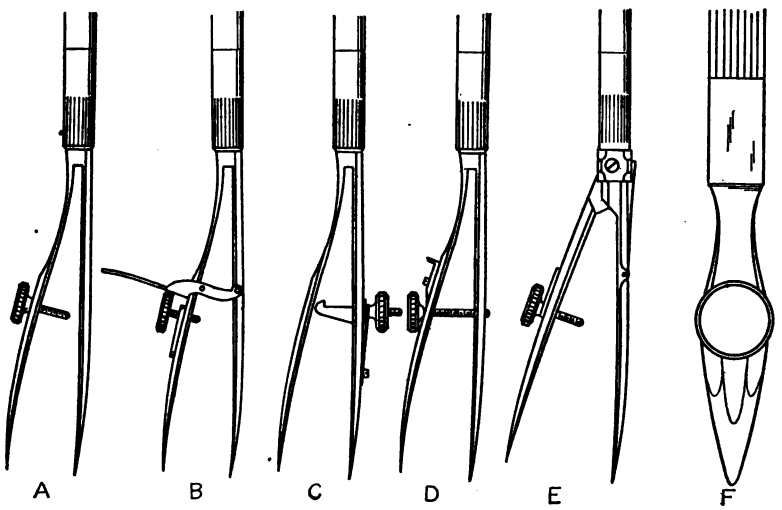

FIG. 7.—Various pens.

remedy will be to solder the joint fast. The improved form has a spring blade opening sufficiently wide to allow of cleaning, Fig. 7*A*. A number are made for resetting after cleaning. Several of these are illustrated in the figure. The form shown at *F* is known as a detail pen or Swede pen. For large work this is a very

desirable instrument. Ivory or bone handles break easily and on this account should not be purchased. The nibs of the pen should be shaped as shown in Fig. 543. Cheap pens often come

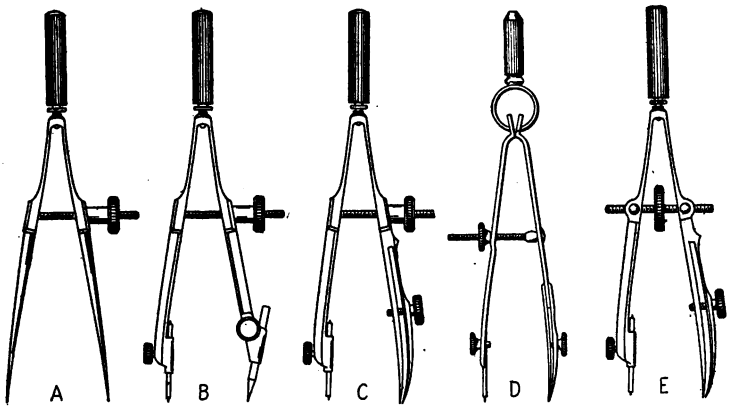

FIG. 8.—Spring bow instruments.

from the factory with points too sharp for use, and must be dressed, as described on page 298 before they can be used.

The set of three spring bow instruments includes bow points or spacers, bow pencil, and bow pen. There are two designs and

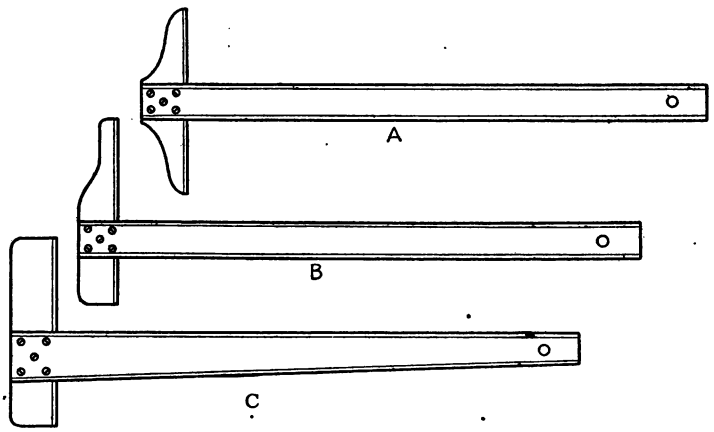

FIG. 9.—Fixed head T-squares.

several sizes. The standard shape is illustrated in Fig. 8, *A*, *B*, *C*, and the hook spring bow at *D*. Both these styles are made with a center screw, *E*, but this form has not become popular

among draftsmen. The springs of the side screw bows should be strong enough to open to the length of the screw, but not so stiff as to be difficult to pinch together. The hook spring bow has a softer spring than the regular.

2. Drawing boards are made of clear white pine (bass wood has been used as a substitute) cleated to prevent warping. Care should be taken in their selection. In drafting-rooms drawing tables with pine tops are generally used instead of loose boards.

3. The T-square with fixed head, Fig. 9, is used for all ordinary work. It should be of hard wood, the blade perfectly straight, although it is not necessary that the head be absolutely square

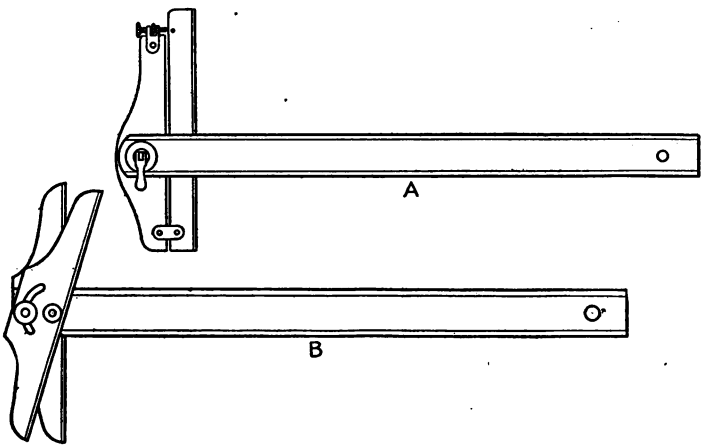

FIG. 10.—Adjustable head T-squares.

with the blade. In a long square it is preferable to have the head shaped as at *B*. *C* is the English type, which is objectionable in that the lower edge is apt to disturb the eyes' sense of perpendicularity. In an office equipment there should always be one or more adjustable head squares, Fig. 10. The T-square blade may be tested for straightness by drawing a sharp line with it, then reversing the square.

4. **Triangles.**—(sometimes called set squares) are made of pear wood or cherry, mahogany with ebony edges, hard rubber, and transparent celluloid. The latter are much to be preferred for a variety of reasons, although they have a tendency to warp. Wooden triangles cannot be depended upon for accuracy, and hard rubber should not be tolerated. For ordinary work a 6″ or 8″–45 degree and a 10″–60 degree are good sizes. A small

triangle, 67½ degrees to 70 degrees, will be of value for drawing guide lines in slant lettering. A triangle may be tested for accuracy by drawing perpendicular lines as shown in Fig. 11.

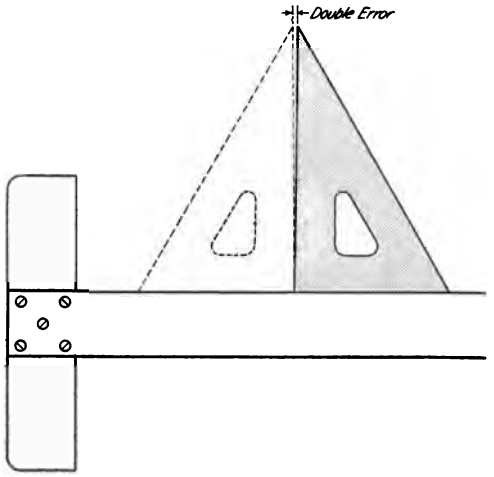

FIG. 11.—To test a triangle.

The angles may be proven by constructing 45- and 60-degree angles geometrically.

5. **Scales.**—There are two kinds of modern scales, the civil

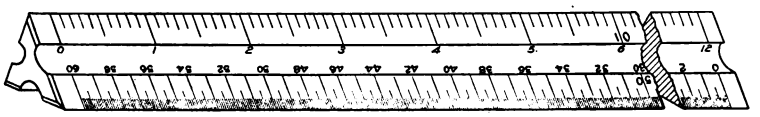

FIG. 12.—Civil engineers' scale.

engineers' scale of decimal parts, Fig. 12, and the mechanical engineers' (or architects') scale of proportional feet and inches, Fig. 13. The former is used for plotting and map drawing, and

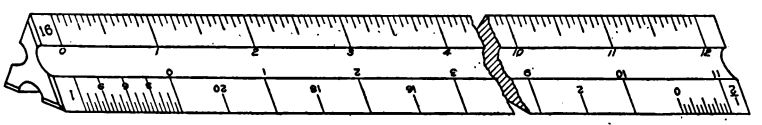

FIG. 13.—Mechanical engineers' scale.

in the graphic solution of problems, the latter for all machine and structural drawings. Scales are usually made of boxwood, sometimes of metal or paper, and of shapes shown in section

in Fig. 14. The triangular form *A* is perhaps the commonest. Its only advantage is that it has more scales on one stick than the others, but this is offset by the delay in finding the scale wanted. Flat scales are much more convenient, and should be chosen on this account. Three flat scales are the equivalent of one triangular scale. The "opposite bevel" scale *G* is easier to pick up than the regular form *F*. Many professional drafts-

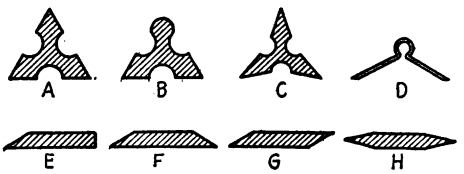

FIG. 14.—Sections of scales.

men use a set of 6 or 8 scales, each graduated in one division only, as Fig. 15.

For the student two 12″ flat scales, one graduated in inches and sixteenths, and 3″ and 1½″, the other 1″, ½″, ¼″, ⅛″, will serve for all ordinary work. The usual triangular scale contains in addition to these, ¾″, ⅜″, 3/16″ and 3/32″, and a third flat scale with these divisions may be added when needed.

6. The best thumb tacks are made with a thin head and steel point screwed into it, and cost as high as seventy-five cents a dozen. The ordinary stamped tacks at thirty cents a hundred answer every purpose. Tacks with comparatively short, taper-

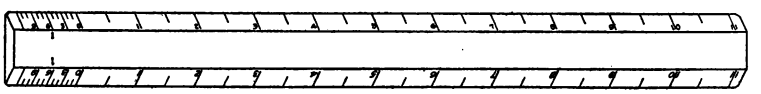

FIG. 15.—Single scale from a set.

ing pins should be chosen. Instead of thumb tacks many draftsmen prefer ½—or 1 oz. copper tacks, but they are not recommended for students' use.

7. Drawing pencils are graded by letters from 6B (very soft and black) 5B, 4B, 3B, 2B, B, HB, F, H, 2H, 3H, 4H, 5H, 6H, to 9H (extremely hard). For line work 6H is generally used. A softer pencil (2H) should be used for lettering, sketching and penciling not to be inked. Many prefer a holder known as an "artist's pencil."

8. A sandpaper pencil pointer or flat file should always be at hand for sharpening the leads.

9. Drawing ink is finely ground carbon in suspension, with shellac added to render it waterproof. The non-waterproof ink flows more freely, but smudges very easily.

Formerly all good drawings were made with stick ink, rubbed up for use with water in a slate slab, and for very fine line work this is still preferred as being superior to liquid ink. When used in warm weather a few drops of acetic acid or oxgall should be added to prevent flies from eating it. A fly can eat up a line made of good Chinese ink as fast as it leaves the pen.

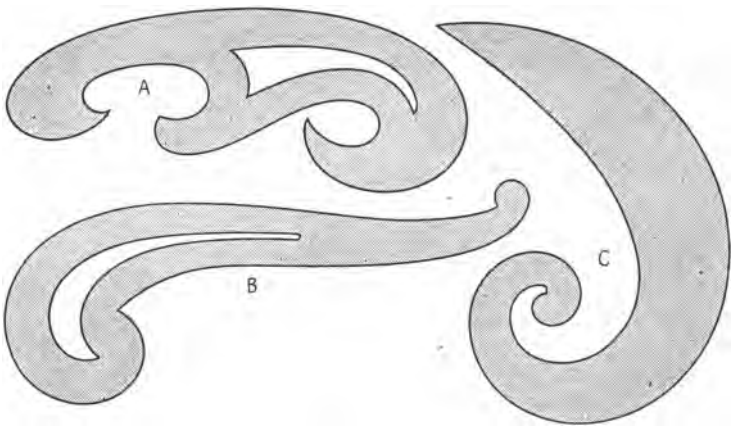

FIG. 16.—Irregular curves.

10. The penholder should have a cork grip small enough to enter the mouth of the ink bottle. An assortment of pens for lettering, grading from coarse to fine may be chosen from those listed in Chapter V.

A penwiper of lintless cloth or thin chamois skin should always be at hand for both writing and ruling pens.

11. Curved rulers, called irregular curves, or French curves, are used for curved lines other than circle arcs. Celluloid is the only material to be considered. The patterns for these curves are laid out in parts of ellipses and spirals or other mathematical curves in combinations which will give the closest approximation to curves likely to be met with in practice. For the student, one ellipse curve, of the general shape of Fig. 16, *A* or *B*, and one spiral, either a log. spiral *C*, or one similar to the one used in

Fig. 51, will be sufficient. It has been found by experiments that the curve of the logarithmic spiral is a closer approximation to the cycloid and other mathematical curves than any other simple curve.

Sometimes it is advisable for the draftsman to make his own templet for special or recurring curves. These may be cut out of thin holly or bass wood, sheet lead, celluloid, or even card-board or press-board.

Flexible curved rulers of different kinds are sold. A copper wire or piece of wire solder has been used as a home-made substitute.

The curve illustrated in Fig. 17 has been found particularly useful for engineering diagrams, steam curves, etc. It is plotted on the polar equation $r = A \sec \theta + K$, in which A may be about $5\frac{1}{2}''$ and K $8''$.

FIG. 17.—Diagram curve.

12. The ruby pencil eraser is the favorite at present. One of large size, with beveled end is preferred. This eraser is much better for ink than a so-called ink eraser, as it will remove the ink perfectly without destroying the surface of paper or cloth. A piece of art gum, soft rubber, or sponge rubber is useful for cleaning paper.

13. Drawing paper is made in a variety of qualities, white for finished drawings and cream or buff tint for detail drawings. It may be had either in sheets or rolls. In general, paper should have sufficient grain or "tooth" to take the pencil, be agreeable to the eye, and have good erasing qualities. Good paper should hold a surface upon which a clean cut inked line can be drawn after several inked lines have been erased. Tracing cloth should stand the same test. For wash drawings Whatman's paper should be used, and for fine line work for reproduction Reynold's Bristol board. These are both English papers in sheets, whose sizes may be found listed in any dealer's catalogue. Whatman's is a handmade paper in three finishes, H, C.P., and R, or hot

pressed, cold pressed, and rough; the first for fine line drawings, the second for either ink or color, and the third for water color sketches. The paper in the larger sheets is heavier than in the smaller sizes, hence it is better to buy large sheets and cut them up. Bristol board is a very smooth paper, made in different thicknesses, 2-ply, 3-ply, 4-ply, etc.; 3-ply is generally used. For working drawings the cream or buff detail papers are much easier on the eyes than white papers. The cheap manilla papers should be avoided. A few cents more per yard is well spent in the increased comfort gained from working on good paper. In buying in quantity it is cheaper to buy roll paper by the pound. For maps or other drawings which are to withstand hard usage, mounted papers, with cloth backing are used. Drawings to be duplicated by blue printing are made on bond or ledger papers, or traced on tracing paper or tracing cloth. Tracing and the duplicating processes are described in Chapter XV.

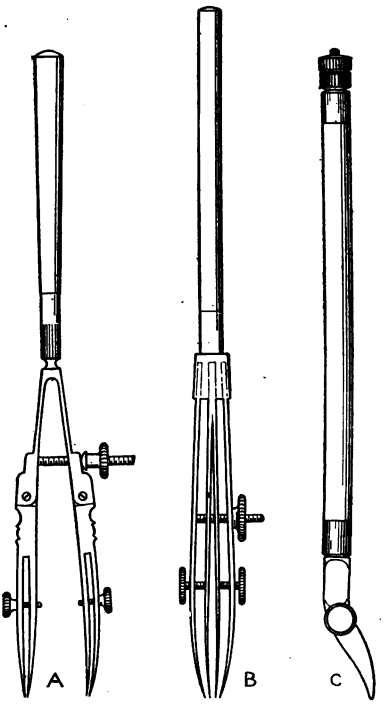

FIG. 18.—Special pens.

The foregoing instruments and materials are all that are needed in ordinary practice, and are as a rule, with the exception of such supplies as paper, pencils, ink, erasers, etc., what a draftsman is expected to take with him into a commercial drafting room.

There are many other special instruments and devices not necessary in ordinary work. With some of these the draftsman should be familiar, as they may be very convenient in some special cases, and are often found as part of a drafting room equipment.

The railroad pen is used for double lines. In selecting this pen notice that the pens are turned as illustrated in Fig. 18*A*.

Most forms have the pens in opposite directions. A much better pen for double lines up to ¼″ apart is the border pen, *B*, as it can

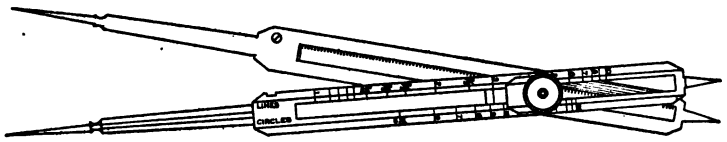

Fig. 19.—Proportional dividers.

be held down to the paper more satisfactorily. It may be used for very wide solid lines by inking the middle space as well as the two pens.

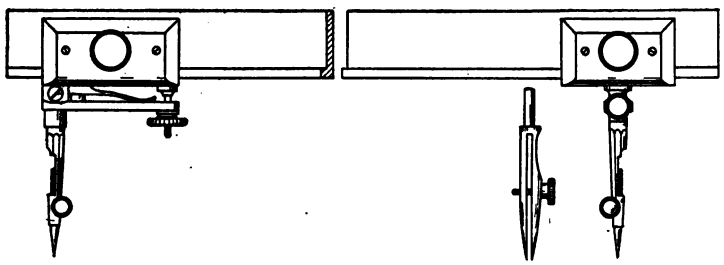

Fig. 20.—Beam compasses.

The curve pen, Fig. 18*C*, made with a swivel, for freehand curves, contours, etc., is of occasional value.

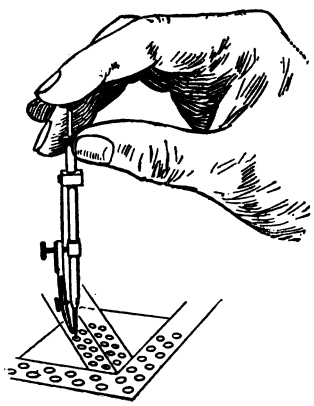

Fig. 21.—Drop pen.

Proportional dividers, for enlarging or reducing in any proportion, Fig. 19, are used in map work, patent office drawings, etc. The divisions marked "lines" are linear proportions, those marked "circles" give the setting for dividing a circle whose diameter is measured by the large end into the desired number of equal parts.

The beam compasses are used for circles larger than the capacity of the compasses and lengthening bar. A good form is illustrated in Fig. 20. The bar with shoulder prevents the parts from turning or falling off.

With the "drop pen" or rivet pen smaller circles can be made, and made much faster than with the bow pen. It is held as

shown in Fig. 21, the needle point stationary and the pen revolving around it. It is of particular convenience in bridge and structural work, and in topographical drawing.

A protractor is a necessity in map and topographical work. A semicircular brass or german silver one, 6″ diameter, such as Fig.

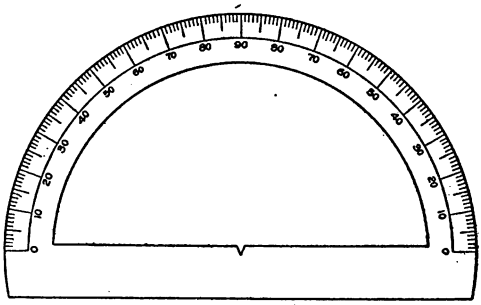

Fig. 22.—Protractor.

22, will read to half degrees. They may be had with an arm and vernier reading to minutes.

Section lining or "cross hatching" is a difficult operation for the beginner, but is done almost automatically by the experienced draftsman. Several instruments for mechanical spacing have

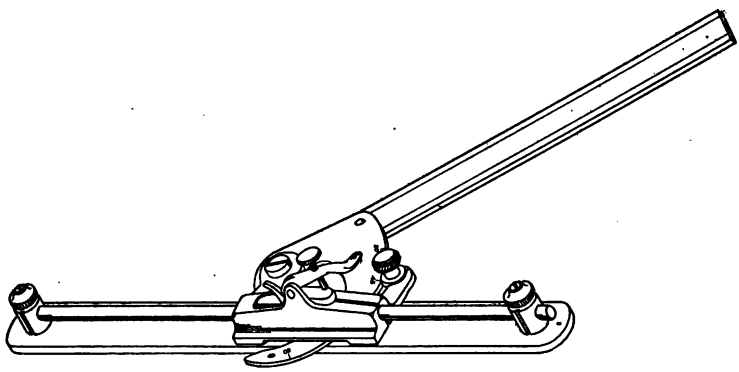

Fig. 23.—Section liner.

been devised. For ordinary work they are not worth the trouble of setting up, and a draftsman should never become dependent upon them, but they are of limited value for careful drawing for reproduction. A satisfactory form is shown in Fig. 23.

There are several machines on the market designed to save

time and trouble in drawing. The best known is the Universal Drafting Machine illustrated in Fig. 24. This machine, which combines the functions of T-square, triangle, scale and protractor, has had the test of years of use, and is used extensively in large drafting rooms, and by practising engineers and architects. It

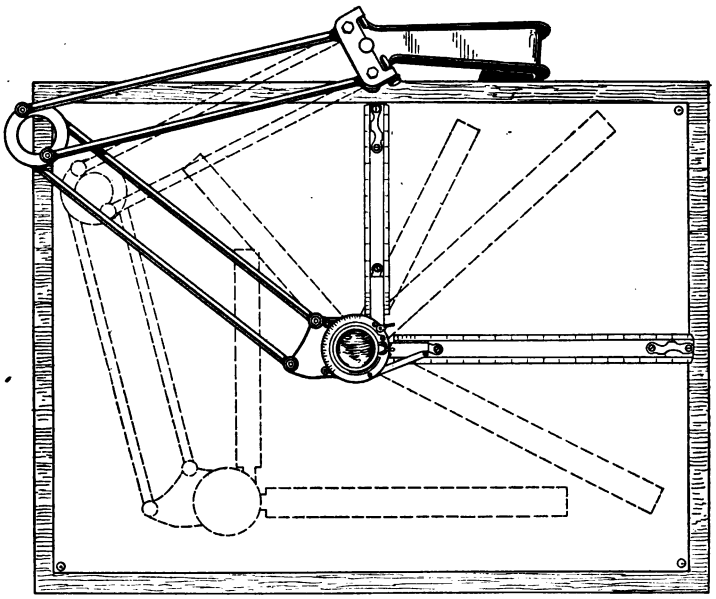

FIG. 24.—"Universal" drafting machine.

has been estimated that 25% of time in machine drawing and over 50% in civil engineering work is saved by its use.

Vertical drawing boards with sliding parallel straight edges are preferred by some for large work.

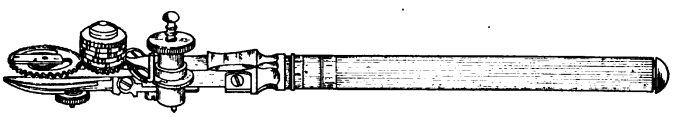

FIG 25.—Dotting pen.

Several kinds of dotting pens have been introduced. The one illustrated in Fig. 25 is perhaps the best. When carefully handled it works successfully, and will make five different kinds of dotted and dashed lines. The length of the short dots may be varied by a slight inclination of the handle. For special

work requiring a great many dotted lines it might prove to be a good investment.

A number of different forms of patented combination "triangles" have been devised. Several are shown in Fig. 26.

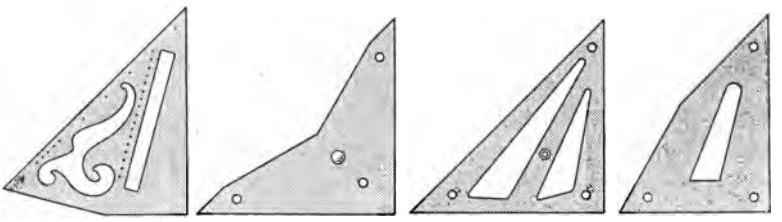

FIG. 26.—Line-o-graph, Kelsey, Zange & Rondinella "triangles."

Bottle holders prevent the possibility of ruining the drawing, table or floor by the upsetting of the ink bottle. Fig. 27 shows a usual form, and also a novelty of the Alteneder Co. by whose aid the pen may be filled with one hand and time saved thereby.

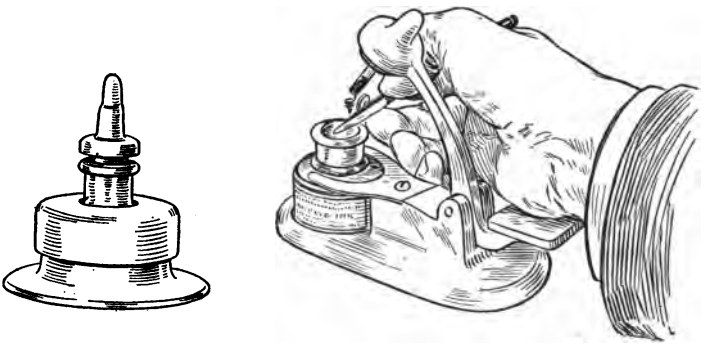

FIG. 27.—Bottle holders.

Erasing shields of metal or celluloid, meant to protect the drawing while an erasure is being made, are sold. Slots for the purpose may be cut as needed from sheet celluloid or tough paper.

CHAPTER III

The Use of Instruments

In beginning the use of drawing instruments particular attention should be paid to correct method in their handling. There are many instructions and cautions, whose reading may seem tiresome, and some of which may appear trivial, but the strict observance of all these details is really necessary, if one would become proficient in the art.

Facility will come with continued practice, but from the outset *good form* must be insisted upon. One might learn to write fairly, holding the pen between the fingers or gripped in the closed hand, but it would be poor form. It is just as bad to draw in poor form as to write in poor form. Bad form in drawing is distressingly common, and may be traced in every instance to lack of care or knowledge at the beginning, and the consequent formation of bad habits. These habits when once formed are most difficult to overcome.

All the mechanical drawing we do serves incidentally for practice in the use of instruments, but it is best for the beginner to learn the functions and become familiar with the handling and "feel" of each of his instruments by making two or three drawings designed for that purpose so that when real drawing problems are encountered the use of the instruments will be easy and natural, and there need be no distraction nor loss of time on account of correction for faulty manipulation.

These practice drawings may either be simply exercises such as those on pages 35 and 36 or drawings of simple pieces, the object of them is the same—to give the student a degree of skill and assurance, so that he is not afraid of his instruments.

The two requirements are *accuracy* and *speed*, and in commercial work neither is worth much without the other. Accurate penciling is the first consideration. Inking should not be attempted until a certain proficiency in penciling has been attained. A good instructor will not accept a beginner's drawing if it has the least inaccuracy, blot, blemish or indication of ink

erasure. It is a mistaken kindness to the beginner to accept faulty or careless work. The standard set at this time will be carried through his professional life, and he should learn that a good drawing can be made just as quickly as a poor one. Erasing is expensive and mostly preventable, and the student allowed to continue in a careless way will grow to regard his eraser and jack knife as the most important tools in his kit. The draftsman of course erases an occasional mistake, and instructions in making corrections may be given later in the course, but these first plates must not be erased.

Preparation for Drawing.—The drawing table should be set so that the light comes from the left, and adjusted to a convenient height for standing, that is, from 36 to 40 inches, with the board inclined at a slope of about 1 to 8. One may draw with more freedom standing than sitting.

The Pencil.—The pencil must be selected with reference to the kind of paper used. For line drawing on paper of good texture, a pencil as hard as 6H may be used, while on Bristol, for

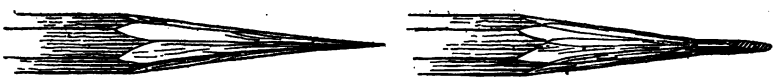

A. *B.*

FIG. 28.—Sharpening the pencil.

example, a softer one would be preferred. Sharpen it to a long conical point as in Fig. 28*A* by removing the wood with the penknife and sharpening the lead by rubbing it on the sandpaper pad. A flat or wedge point *B* will not wear away in use as fast as a conical point, and on that account is preferred for straight line work by some draftsmen. By oscillating the pencil slightly while rubbing the lead on two opposite sides, an elliptical section is obtained. A softer pencil (H or 2H) should be at hand, sharpened to a long conical point for sketching and lettering. Have the sandpaper pad within reach and keep the pencils sharp. Pencil lines should be made lightly, but sufficiently firm and sharp to be seen distinctly without eye strain, for inking and tracing. The beginner's usual mistake in using a hard pencil is to cut tracks in the paper. Too much emphasis cannot be given to the importance of clean, careful, accurate penciling. Never permit the thought that poor penciling may be corrected in inking.

The T-Square.—The T-square is used only on the left edge of the drawing board (an exception to this is made in the case of a left-handed person, whose table should be arranged with the light coming from the right and the T-square used on the right edge).

Since the T-square blade is more rigid near the head than toward the outer end, the paper, if much smaller than the size of the board, should be placed close to the left edge of the board (within an inch or so) with its lower edge several inches from the bottom. With the T-square against the left edge of the board, square the top of the paper approximately, hold in this position, slipping the T-square down from the edge, and put a thumb tack in each upper corner, pushing it in up to the head; move the T-square down over the paper to smooth out possible wrinkles and put thumb tacks in the other two corners.

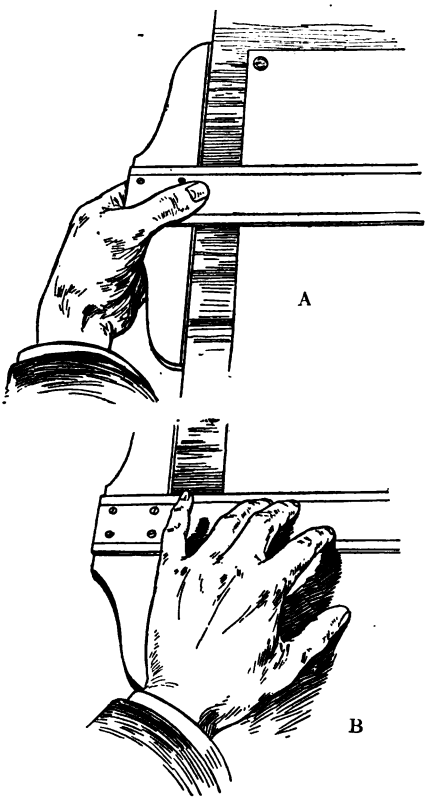

FIG 29.—Manipulating the T-square.

The T-square is used manifestly for drawing parallel horizontal lines. These lines should always be drawn from left to right, consequently points for their location should be marked on the left side; vertical lines are drawn with the triangle set against the T-square, always with the perpendicular edge nearest the head of the square and toward the light. These lines are always drawn *up* from bottom to top, consequently their location points should be made at the bottom.

In drawing lines great care must be exercised in keeping them accurately parallel to the T-square or triangle, holding the pencil

point lightly, but close against the edge, and not varying the angle during the progress of the line.

The T-square is adjusted by holding it in the position either of *A*, Fig. 29 the thumb up, and the fingers touching the board under the head, or of *B*, the fingers on the blade and the thumb on the board. In drawing vertical lines the T-square is held in position against the left edge of the board, the thumb on the blade, while the fingers of the left hand adjust the triangle, as illustrated in Fig. 30. One may be sure the T-square is in contact with the board by hearing the little double click as it comes against it.

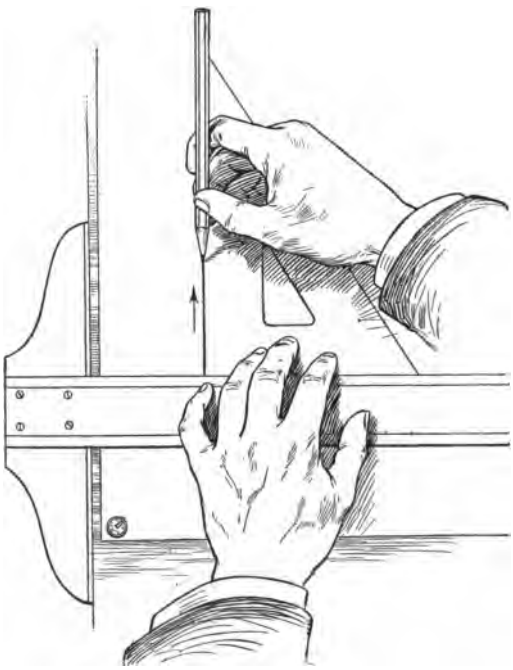

FIG. 30.—Drawing a vertical line.

Laying out the Sheet.—The paper is usually cut somewhat larger than the desired size of the drawing, and is trimmed to size after the work is finished. Suppose the plate is to be 11″ × 15″ with a half-inch border. Lay the scale down on the paper close to the lower edge and measure 15″, marking the distance with the pencil, at the same time marking ½″ inside at each end for the border line. Always use a short dash forming a continua-

tion of the division on the scale in laying off a dimension. Do not make a dot, or bore a hole with the pencil. Near the left edge mark 11″ and ½″ border line points. Through these four marks on the left edge draw horizontal lines with the T-square, and through the points on the lower edge draw vertical lines with the triangle against the T-square.

Fig. 31.—Handling the dividers.

Use of Dividers.—Facility in the use of this instrument is most essential, and quick and absolute control of its manipulation must be gained. It should be opened with one hand by pinching in the chamfer with the thumb and second finger. This will throw it into correct position with the thumb and forefinger on the outside of the legs and the second and third finger on the inside, with the head resting just above the second joint of the forefinger, Fig. 31. It is thus under perfect control, with the thumb and forefinger to close it and the other two to open it. This motion should be practised until an adjustment to the smallest fraction can be made. In coming down to small divisions the second and third fingers must be gradually slipped out from between the legs while they are closed down upon them.

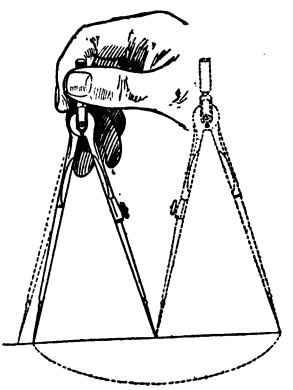

Fig. 32.—Bisecting a line.

To Divide a Line by Trial.—In bisecting a line the dividers are opened roughly at a guess to one-half the length. This distance is stepped off on the line, holding the instrument by the handle with the thumb and forefinger. If the division be short the leg should be thrown out to one-half the remainder, estimated by the eye, without removing the other leg from its position on the paper, and the line spaced again with this setting, Fig. 32. If this should not come out exactly the operation may be repeated. With a little experience a line may be divided in this way very

rapidly. Similarly a line may be divided into any number of equal parts, say five, by estimating the first division, stepping this lightly along the line, with the dividers held vertically by the handle, turning the instrument first in one direction and then in the other. If the last division fall short, one-fifth of the remainder should be added by opening the dividers, keeping the one point on the paper. If the last division be over, one-fifth of the excess should be taken off and the line respaced. If it is found difficult to make this small adjustment accurately with the fingers, the hair-spring may be used. It will be found more convenient to use the bow spacers instead of the dividers for small or numerous divisions. Avoid pricking unsightly holes in the paper. The position of a small prick point may be preserved if necessary by drawing a little ring around it with the pencil.

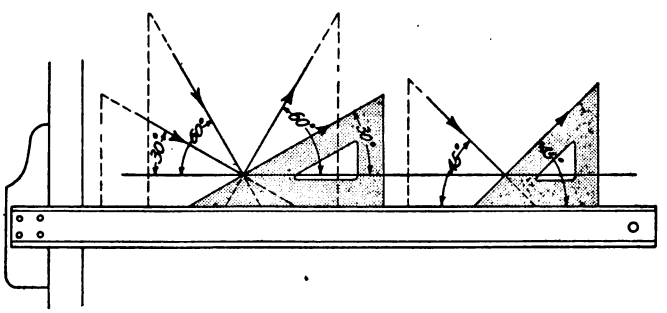

FIG. 33.—To draw angles of 30°, 45° and 60°.

Use of the Triangles.—We have seen that vertical lines are drawn with the triangle set against the T-square, Fig. 30. Generally the 60-degree triangle is used, as it has the longer perpendicular. In both penciling and inking, the triangles should always be used in contact with a guiding straight-edge. To insure accuracy never work to the extreme corner of a triangle.

With the T-square against the edge of the board, lines at 30 degrees, 45 degrees and 60 degrees may be drawn as shown in Fig. 33, the arrows indicating the direction of motion. The two triangles may be used in combination for angles of 15, 75, 105 degrees, etc., Fig. 34. Thus any multiple of 15 degrees may be drawn directly, and a circle may be divided with the 45-degree triangle into 4 or 8 parts, with the 60-degree triangle into 6 or 12 parts, and with both into 24 parts.

In using the triangles always keep the T-square at least a half inch *below* the starting line.

To draw a parallel to any line, Fig. 35*A*, adjust to it a triangle held against the T-square or other triangle, hold the guiding

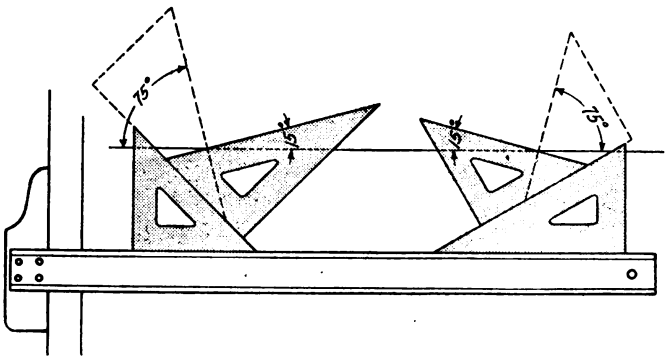

FIG. 34.—To draw angles of 15° and 75°.

edge in position and slip the first triangle on it to the required position.

To draw a perpendicular to any line, Fig. 35*B*, fit the hypotenuse of a triangle to it, with one edge against the T-square or other triangle, hold the T-square in position and turn the triangle until its other side is against the edge, the hypotenuse will then be perpendicular to the line. Move it to the required position.

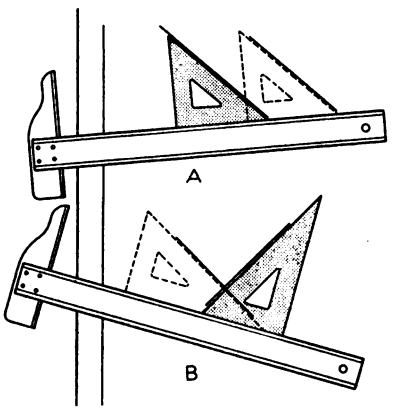

FIG. 35.—(*A*) To draw parallel lines. (*B*) To draw perpendicular lines.

Never attempt to draw a perpendicular to a line by merely placing one leg of the triangle against it.

Use of the Compasses.—The compasses have the same general shape as the dividers and are manipulated in a similar way. The needle point should first of all be adjusted by turning it with the shoulder point out, inserting the pen in the place of the pencil leg and setting the needle a trifle longer than the pen, Fig. 36. The needle point should be kept in this position so as to be always

ready for the pen, and the lead adjusted to it. The lead should be sharpened on the sandpaper to a fine wedge or long bevel point. Radii should be pricked off or marked on the paper and the pencil leg adjusted to the points. The needle point

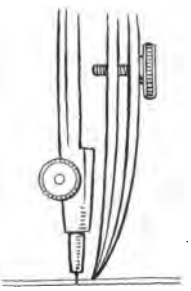

FIG. 36.—Needle point adjustment.

FIG. 37.—Guiding the needle point.

may be guided to the center with the little finger of the left hand, Fig. 37. When the lead is adjusted to pass exactly through the mark the right hand should be raised to the handle and the circle drawn (clockwise) in one sweep by turning the compasses,

FIG. 38.—Starting a circle.

FIG. 39.—Completing a circle.

rolling the handle with the thumb and forefinger, inclining it slightly in the direction of the line, Fig. 38. The position of the fingers after the revolution is illustrated in Fig. 39. Circles up to perhaps three inches in diameter may be drawn with the legs

straight but for larger sizes both the needle-point leg and the pencil or pen leg should be turned at the knuckle joints so as to be perpendicular to the paper, Fig. 40. The 5½-inch compasses may be used in this way for circles up to perhaps ten inches in diameter; larger circles are made by using the lengthening bar, as illustrated in Fig. 41, or the beam compasses. In drawing concentric circles the smallest should always be drawn first.

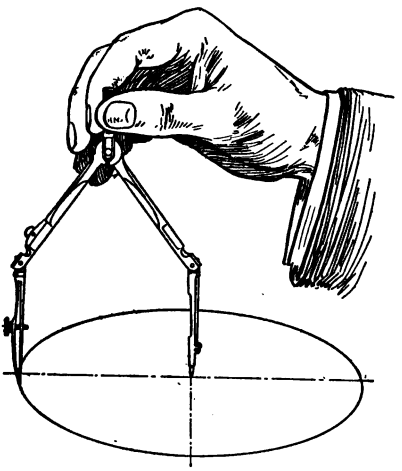

FIG. 40.—Drawing a large circle.

The bow instruments are used for small circles, particularly when a number are to be made of the same diameter. In changing the setting, to avoid wear and final stripping of the thread the pressure of the spring against the nut should be relieved by holding the points in the left hand and spinning the nut in or out with the finger. Small adjustments should be made with one hand, with the needle point in position on the paper, Fig. 42.

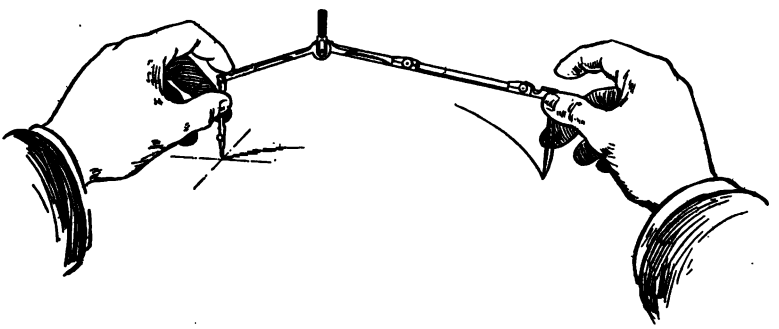

FIG. 41.—Use of lengthening bar.

Use of the Scale.—In representing objects which are larger than can be drawn to their natural or full size it is necessary to reduce dimensions on the drawing proportionately, and for this purpose the mechanical engineers' (or architects') scale is used. The first reduction is to what is commonly called half size or

correctly speaking, to the scale of 6″ = 1′. This scale is used in working drawings even if the object be only slightly larger than could be drawn full size, and is generally worked with the full-size scale by considering six inches on the scale to represent one foot. Thus the half-inch divisions become full inches, each of which is divided into eighths of inches. If this scale is too large for the paper the drawing is made to the scale of three inches to the foot, often called "quarter size," that is, three inches measured on the drawing is equal to one foot on the object. This is the first scale of the usual commercial set, on it the distance of three inches is divided into twelve equal parts and each of these subdivided into eighths. This distance should be thought of not as three inches but as a foot divided into inches and eighths of inches. It is noticed that this foot is divided with the zero on the inside, the inches running to the left and the feet to the right, so that dimensions given in feet and inches may be read directly, as 1 ft. 0½″, Fig. 43. On the other end will be found the scale of 1½ inches equals one foot, or eighth size, with the distance of one and one-half inches divided on the right of the zero into

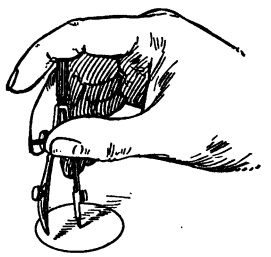

FIG. 42.—Adjusting the bow pen.

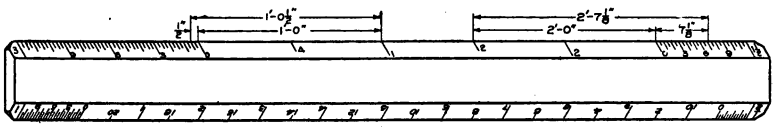

FIG. 43.—Reading the scale.

twelve parts and subdivided into quarter inches, and the foot divisions to the left of the zero, coinciding with the marks of the 3″ scale.

If the 1½″ scale is too large for the object, the next commercial size is to the scale of one inch equals one foot, and so on down as shown in the following table.

Full size	¾″ = 1′
Scale 6″ = 1′	½″ = 1′
4″ = 1′ (rarely used)	⅜″ = 1′
3″ = 1′	¼″ = 1′
2″ = 1′ (rarely used)	3/16″ = 1′
1½″ = 1′	⅛″ = 1′
1″ = 1′	3/32″ = 1′

Drawings to odd proportions such as 9″ = 1′, 4″ = 1′ etc. are not used except in rare cases when it is desired to make it difficult or impossible for a workman to measure them with an ordinary rule.

The scale ¼″ equals 1 ft. is the usual one for ordinary house plans, and is often called by architects the "quarter scale." This term should not be confused with the term "quarter size," as the former means ¼″ to 1 ft. and the latter ¼″ to 1 inch.

A circle is generally given in terms of its diameter. To draw it the radius is necessary. In drawing to half size it is thus often convenient to lay off the amount of the diameter with a 3-in. scale and to use this distance as the radius.

As far as possible successive measurements on the same line should be made without shifting the scale.

For plotting and map drawing the civil engineers' scale of decimal parts 10, 20, 30, 40, 50, 60, 80, 100 to the inch, is used. This scale should never be used for machine or structural work.

Inking.—After being penciled, drawings are finished either by inking on the paper, or in the great majority of work, by tracing

FIG. 44.—Correct position of ruling pen.

in ink on tracing cloth. The beginner should become proficient in inking on cloth, as well as on paper. Tracing and blue printing are described in detail on page 278.

The ruling pen is never used freehand, but always in connection with a guiding edge, either T-square, triangle, straight-edge or curve. The T-square and triangle should be held in the same

positions as for penciling. It is bad practice to ink with the triangle alone.

To fill the pen take it to the bottle and touch the quill filler between the nibs, being careful not to get any ink on the outside of the blades. Not more than three-sixteenths of an inch should be put in or the weight of the ink will cause it to drop out in a blot. The pen should be held as illustrated in Fig. 44, with the thumb and second finger in such position that they may be used in turning the adjusting screw, and the handle resting on the fore-finger. This position should be observed carefully, as the tendency will be to bend the second finger to the position in which a pencil or writing pen is held, which is obviously convenient in writing to give the up stroke, but as this motion is not required with the ruling pen the position illustrated is preferable.

For full lines the screw should be adjusted to give a strong line, of the size of the first line of Fig. 48. A fine drawing does not mean a drawing made with fine lines, but with uniform lines, and accurate joints and tangents.

The pen should be held against the straight-edge with the blades parallel to it, the handle inclined slightly to the right and always kept in a plane through the line perpendicular to the paper. The pen is thus guided by the upper edge of the ruler, whose distance from the pencil line will therefore vary with its thickness, and with the shape of the under blade of the pen, as illustrated in actual size in Fig. 45. If the pen is thrown out from the perpendicular it will run on one blade and a line ragged on one side will result. If turned in from the perpendicular the ink is very apt to run under the edge and cause a blot.

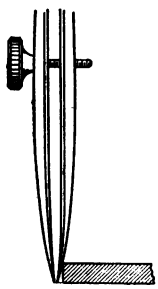

FIG. 45.—Pen and guide.

A line is drawn with a whole arm movement, the hand resting on the tips of the third and fourth fingers, keeping the angle of inclination constant. Just before reaching the end of the line the two guiding fingers on the straight edge should be stopped, and, without stopping the motion of the pen, the line finished with a finger movement. Short lines are drawn with this finger movement alone. When the end of the line is reached lift the pen quickly and move the straight edge away from the line. The pressure on the paper should be light, but sufficient to give a clean cut line, and will vary with the kind of paper and the sharpness

of the pen, but the pressure against the T-square should be only enough to guide the direction.

If the ink refuses to flow it is because it has dried and clogged in the extreme point of the pen. If pinching the blades slightly or touching the pen on the finger does not start it, the pen should immediately be wiped out and fresh ink added. Pens must be wiped clean after using or the ink will corrode the steel and finally destroy them.

Instructions in regard to the ruling pen apply also to the compasses. The pen should be kept perpendicular by using the knuckle joint, and inclined slightly in the direction of the line. In adjusting the compasses for an arc which is to connect other lines the pen point should be brought down very close to the paper without touching it to be sure that the setting is exactly right.

It is a universal rule in inking that circles and circle arcs must be drawn first. It is much easier to connect a straight line to a curve than a curve to a straight line.

It should be noted particularly that two lines are tangent to each other when their centers are tangent, and not when the lines simply touch each other, thus at the point of tangency the width will be equal to the width of a single line, Fig. 46*A*.

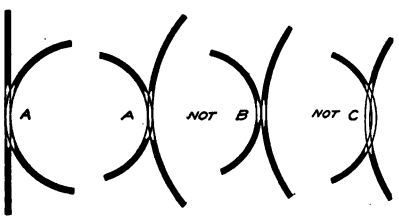

FIG. 46.—Correct and incorrect tangents.

After reading these paragraphs the beginner had best take a blank sheet of paper and cover it with ink lines of varying lengths and weights, practising starting and stopping on penciled limits, until he feels acquainted with the pens. If in his set there are two pens of different sizes the larger one should be used, as it fits the hand of the average man better than the smaller one, holds more ink, and will do just as fine work.

Faulty Lines.—If inked lines appear imperfect in any way the reason should be ascertained immediately. It may be the fault of the pen, the ink, the paper, or the draftsman, but with the probabilities greatly in favor of the last. Fig. 47 illustrates the characteristic appearance of several kinds of faulty lines. The correction in each case will suggest itself.

High-grade pens usually come from the makers well sharpened. Cheaper ones often need dressing before they can be used satis-

factorily. If the pen is not working properly it must be sharpened as described in Chapter XVII, page 298.

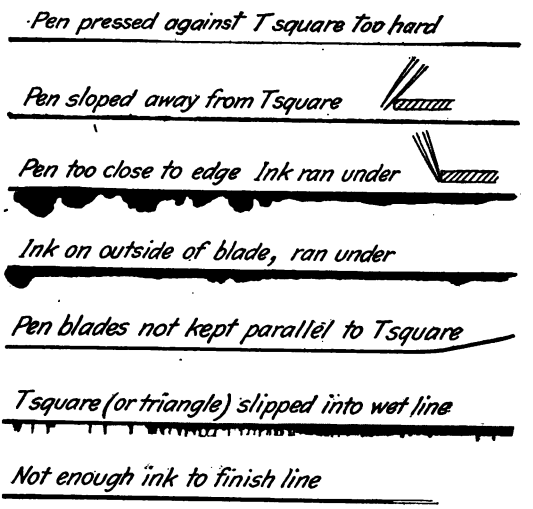

FIG. 47.—Faulty lines.

The Alphabet of Lines.—As the basis of the drawing is the line, a set of conventional symbols covering all the lines needed for

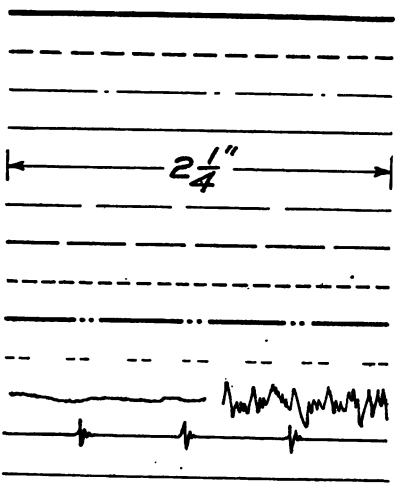

(1) Visible outline
(2) Invisible outline
(3) Center line
(3a) Center line, in pencil
(4) Dimension line
(5) Extension line
(6) Alternate position
(7) Line of motion
(8) Cutting plane
(9) "Ditto" or repeat line
(10) Broken material
(11) Limiting break (Archtl.)
(12) Cross-hatching line

FIG. 48.—The alphabet of lines.

different purposes may properly be called an alphabet of lines. There is as yet no universally adopted standard, but that given

in Fig. 48 is adequate, and represents the practice of a majority of the larger concerns of this country

It is of course not possible to set an absolute standard of weight for lines, as the proper size to use will vary with different kinds and sizes of drawings, but it is possible to maintain a given proportion.

Visible outlines should be strong full lines, at least one-sixty-fourth of an inch on paper drawings, and even as wide as one thirty-second of an inch on tracings. The other lines should contrast with this line in about the proportion of Fig. 48.

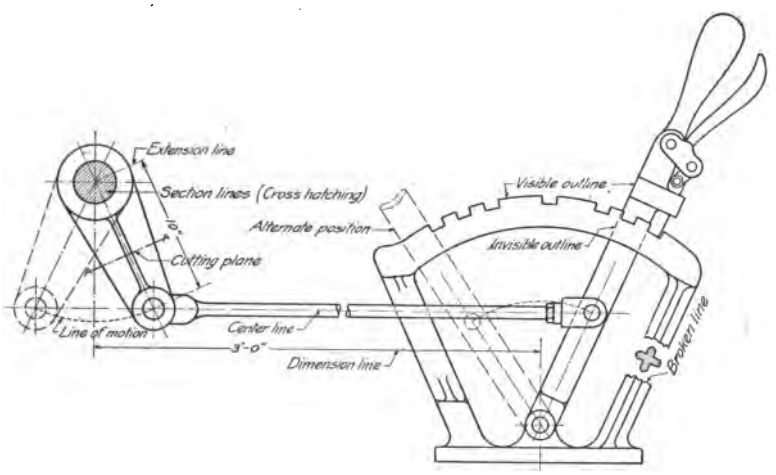

FIG. 49.—The alphabet illustrated.

Dash lines, as (2) and (7), should always have the space between dashes much shorter than the length of the dash. Figs. 49 and 50 illustrate the use of the alphabet of lines.

The Use of the French Curve.—The French curve, as has been stated on page 11 is a ruler for non-circular curves. When sufficient points have been determined it is best to sketch in the line lightly in pencil freehand, without losing the points, until it is clean, smooth, continuous, and satisfactory to the eye. The curve should then be applied to it, selecting a part that will fit a portion of the line most nearly, and noting particularly that the curve is so laid that the direction of its increase in curvature is in the direction of increasing curvature of the line, Fig. 51. In drawing the part of the line matched by the curve, always stop a little short of the distance that seems to coincide. After draw-

ing this portion the curve is shifted to find another part that will coincide with the continuation of the line. In shifting the curve care should be taken to preserve the smoothness and continuity and to avoid breaks or cusps. This may be done if in its succes-

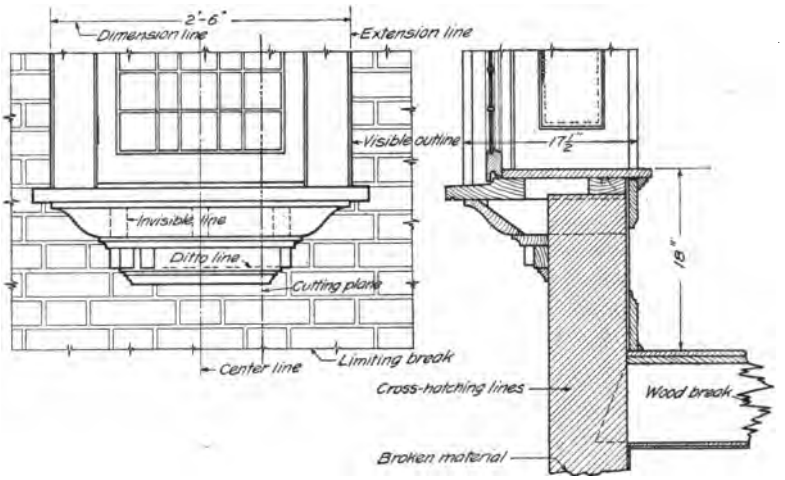

FIG. 50.—The alphabet illustrated.

sive positions the curve is always adjusted so that it coincides for a little distance with the part already drawn. Thus at each joint the tangents must coincide.

If the curved line is symmetrical about an axis, after it has

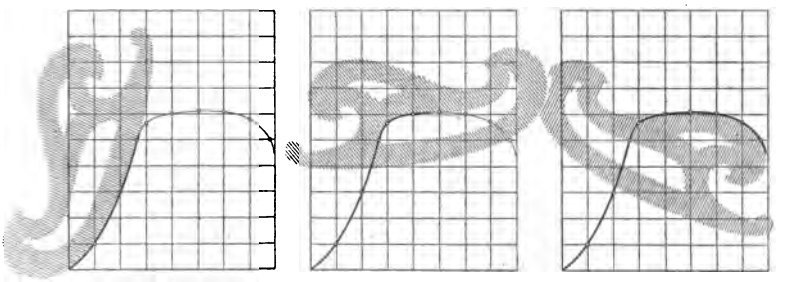

FIG. 51.—Use of the curve.

been matched accurately on one side, marks locating the axes may be made in pencil on the curve and the curve reversed. In such a case exceptional care must be taken to avoid a "hump" at the joint. It is often better to stop a line short of the axis on

each side and to close the gap afterward with another setting of the curve.

When inking with the curve the pen should be held perpendicularly and the blades kept parallel to the edge. Inking curves will be found to be excellent practice.

Sometimes, particularly at sharp turns, a combination of circle arcs and curve may be used, as for example in inking a long, narrow ellipse, the sharp curves may be inked by selecting a center on the major axis by trial, and drawing as much of an arc as will practically coincide with the ends of the ellipse, then finishing the ellipse with the curve.

The experienced draftsman will sometimes ink a curve that cannot be matched accurately, by varying the distance of the pen point from the ruling edge as the line progresses, but the beginner not attempt it.

Exercises in the Use of Instruments.—The following figures may be used, if desired, as progressive exercises for practice in the use of the instruments, either in pencil only, or afterward to be inked. The geometrical figures of Chapter IV afford excellent practice in accurate penciling.

1. An Exercise for the T-Square, Triangle and Scale.—Fig. 52. Through the center of the space draw a horizontal and a vertical line, measuring on these lines as diameters lay off a four-inch square. Along the lower side and the upper half of the left side measure ½″ spaces with the scale. Draw all horizontal lines with the T-square and all vertical lines with the T-square and triangle.

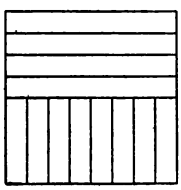

Fig. 52.

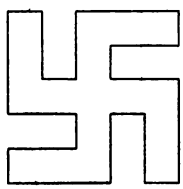

Fig. 53.

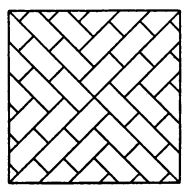

Fig. 54.

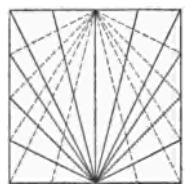

Fig. 55.

2. A "Swastika."—For T-square, triangle and dividers. Fig. 53. Draw a four-inch square. Divide left side and lower side into five equal parts with dividers. Draw horizontal and vertical lines across the square through these points. Erase the parts not needed..

3. A Street Paving Intersection.—For 45-degree triangle and scale. Fig. 54. An exercise in starting and stopping short lines. Draw a four-inch square. Draw diagonals with 45-degree triangle. With scale lay off ½″ spaces along the diagonals, from their intersection. With 45-degree triangle complete figure, finishing one-quarter at a time.

4. Converging Lines.—Full and dotted. Fig. 55. Divide the sides of a four-inch square into 4 equal parts. From these points draw lines to the middle points of the upper and lower sides as shown, using the triangle alone as a straight edge.

5. A Hexagonal Figure.—For 30°−60° triangle and bow points (spacers). Fig. 56. Through the center of the space draw the three construction lines *AB* vertical, *DE* and *FG* at 30 degrees. Measure *CA* and *CB* 2″ long. Draw *AE*, *DB*, *FA* and *BG* at 30 degrees. Complete hexagon by drawing *FD* and *EG* vertical. Set spacers at ⅛″. Step off ⅛″ on each side of the center lines, and ¼″ from each side of hexagon. Complete figure as shown, with triangle against T-square.

6. A Maltese Cross.—For T-square, spacers, and both triangles. Fig. 57. Draw a 4″ square and a 1⅜″ square. From the corners of inner square draw lines to outer square at 15 degrees and 75 degrees, with the two triangles in combination. Mark points with spacers ¼″ inside of each line of this outside cross, and complete figure with triangles in combination.

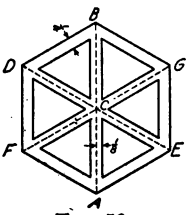

FIG. 56.

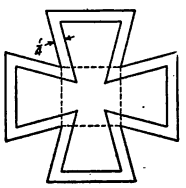
FIG. 57.

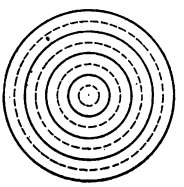
FIG. 58.

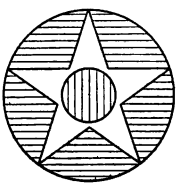
FIG. 59.

7. Concentric Circles.—For compasses (legs straight) and scale. Fig. 58. Draw horizontal line through center of space. On it mark off radii for eight concentric circles ¼″ apart. In drawing concentric circles always draw the smallest first. The dotted circles are drawn in pencil with long dashes, and inked as shown.

8. Air Craft Insignia.—This device is a white star with red center on a blue background. Fig. 59. Draw a four-inch circle and a one-inch circle. Divide large circle into five equal parts with the dividers, and construct star by connecting alternate points as shown. Red is indicated by vertical lines and blue by horizontal lines. Space these by eye approximately 3/32″ apart. (Standard line symbols for colors are given in Fig. 554.)

9. Circle Arc Design.—For compasses (knuckle joints bent) Fig. 60. In a four-inch circle draw four diameters 45 degrees apart. With 5″ radius and centers on these lines extended complete figure as shown.

10. Tangent Arcs.—For accuracy with compasses and dividers. Fig. 61. Draw a circle four inches in diameter. Divide the circumference into five equal parts by trial with dividers. From these points draw radial lines and divide each into four equal parts with spacers. With these points as centers draw the semicircles as shown.

11. Tangent Circles and Lines.—For accuracy with compasses and triangles. Fig. 62. On base *AB*, 4½″ long construct an equilateral triangle, using the 60-degree triangle. Bisect the angles with the 30-degree angle, extending the bisectors to the opposite sides. With these middle points of

the sides as centers and radius equal to ½ the side, draw arcs cutting the bisectors. These intersections will be centers for the inscribed circles. With centers on the intersections of these circles and the bisectors, round off the points of the triangle with tangent arcs as shown. Remember the rule that circles are inked before straight lines. Construction lines are not to be inked.

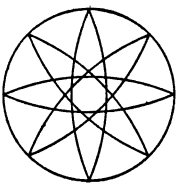

FIG. 60.

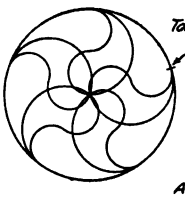

FIG. 61.

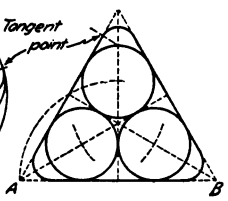

FIG. 62.

FIG. 63.

12. Tangents to Circle Arcs.—For bow compasses. Fig. 63. Draw a two-inch square about center of space. Divide AE into four ¼″ spaces, with scale. With bow pencil and centers A, B, C, D draw four semicircles with ¼″ radius and so on. Complete figure by drawing the horizontal and vertical tangents as shown.

A PAGE OF CAUTIONS

Never use the scale as a ruler.
Never draw with the lower edge of the T-square.
Never cut paper with a knife and the edge of the T-square as a guide.
Never use the T-square as a hammer.
Never put either end of a pencil into the mouth.
Never jab the dividers into the drawing board.
Never oil the joints of compasses.
Never use the dividers as reamers or pincers or picks.
Never take dimensions by setting the dividers on the scale.
Never lay a weight on the T-square to hold it in position.
Never use a blotter on inked lines.
Never screw the nibs of the pen too tight.
Never run backward over a line either with pencil or pen.
Never leave the ink bottle uncorked.
Never hold the pen over the drawing while filling.
Never dilute ink with water. If too thick throw it away. (Ink once frozen is worthless afterward.)
Never put a writing pen which has been used in ordinary writing ink, into the drawing-ink bottle.
Never try to use the same thumb tack holes when putting paper down a second time.
Never scrub a drawing all over with the eraser after finishing. It takes the life out of the inked lines.
Never begin work without wiping off table and instruments.
Never put instruments away without cleaning. This applies with particular force to pens.
Never put bow instruments away without opening to relieve the spring.
Never fold a drawing or tracing.
Never use cheap materials of any kind.

CHAPTER IV

Applied Geometry

With the aid of a straight-edge and compasses all pure geometrical problems may be solved. The principles of geometry are constantly used in mechanical drawing, but as the geometrical solution of problems and construction of figures differs in many cases from the draftsman's method, equipped as he is with instruments for gaining time and accuracy, such problems are not included here. For example, there are several geometrical methods of erecting a perpendicular to a given line; in his ordinary practice the draftsman equipped with T-square and triangles uses none of them. The application of these geometrical methods might be necessary occasionally in work where the usual drafting instruments could not be used, as for example in laying out full size sheet metal patterns on the floor. It is assumed that students using this book are familiar with the elements of plane geometry and will be able to apply their knowledge. If a particular problem is not remembered, it may readily be referred to in any of the standard handbooks. There are some constructions however with which the draftsman should be familiar as they will occur more or less frequently in his work. The constructions in this chapter are given on this account, and for the excellent practice they afford in the accurate use of instruments as well.

To Divide a Line.—The "trial method" of dividing a line was explained in the previous chapter. A convenient geometrical method is illustrated in Fig. 64. To divide a line AB into (say) 5 equal parts, draw any line BC indefinitely; on it step off five divisions of convenient length, connect the last point with A, draw lines through the points parallel to CA intersecting AB, using triangle and straight-edge, as shown in Fig. 35A.

In the application of this principle the draftsman will generally use his scale, first drawing a perpendicular (with triangle and T-square) at A and placing the scale so that five convenient equal divisions are included between B and the perpendicular, as

illustrated in Fig. 65. Perpendiculars drawn with triangle and T-square through the points marked will divide the line AB as required.

This method may be used for dividing a line into any proportional parts.

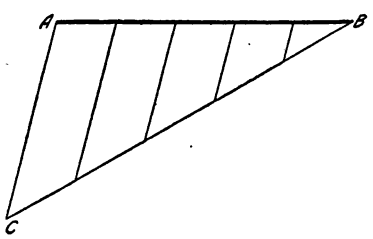

FIG. 64.—To divide a line.

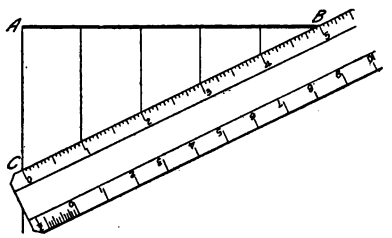

FIG. 65.—To divide a line with scale.

To Construct a Triangle Having Given the Three Sides.—Fig. 66. Given the lengths A, B and C. Draw one side A in the desired position. With its ends as centers and radii B and C draw two intersecting arcs as shown.

To Transfer a Polygon to a New Base.—Fig. 67. Given polygon $ABCDEF$ and desired new position of base A' B'. Consider each point as the vertex of a triangle. With centers A'

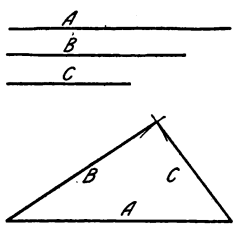

FIG. 66.—To construct a triangle.

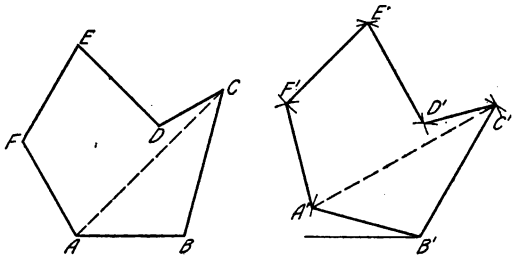

FIG. 67.—To transfer a polygon.

and B' and radii AC and BC describe intersecting arcs, locating the point C'. Similarly with radii AD and BD locate the point D'. Connect $B'C'$ and $C'D'$ and continue the operation.

To Construct a Regular Hexagon.—Fig. 68. Given the distance across corners, AB. Draw a circle on AB as a diameter. With A and B as centers and the same radius draw arcs and connect the points.

A hexagon may be constructed directly on the line AB, without using compasses by drawing lines with the 30°–60° triangle in the order shown in Fig. 69.

To Inscribe a Regular Octagon in a Given Square.—Fig. 70. Draw the diagonals of the square. With the corners of the square as centers and radius of half the diagonal draw arcs intersecting the sides of the square and connect these points.

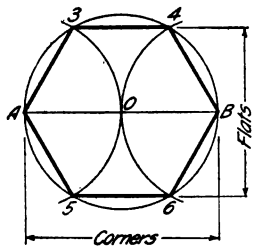

FIG. 68.—Hexagon.

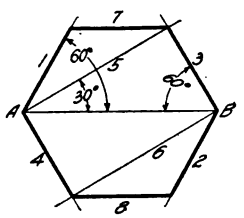

FIG. 69.—Hexagon.

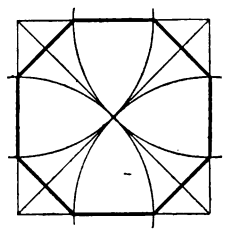

FIG. 70.—Octagon.

To Draw a Circular Arc Through Three Given Points.—Fig. 71. Given A, B and C. Draw AB and BC. The intersection of the perpendicular bisectors of these lines will be the center of the required circle.

To Draw an Arc Tangent to Two Lines.—Fig. 72. Given the lines AB and CD, and radius R. Draw lines parallel to AB and CD at distance R from them. The intersection of these lines will be the center of the required arc.

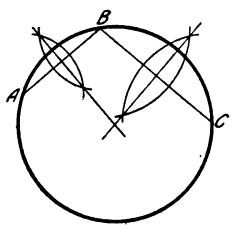

FIG. 71.—Center of arc.

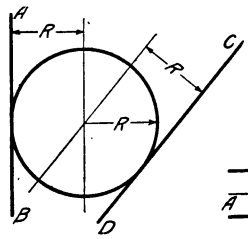

FIG. 72.—Tangent arc.

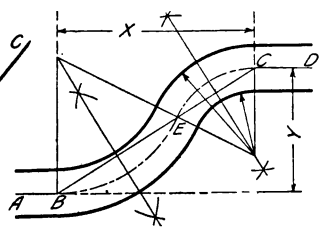

FIG. 73.—"Ogee" curve.

To Draw a Reverse or "Ogee" Curve.—Fig. 73. Given two parallel lines AB and CD. Join B and C by a straight line. Erect perpendiculars at B and C. Any arcs tangent to the lines AB and CD must have their centers on these perpendiculars. On line BC assume point E through which the curve is desired

to pass, and bisect BE and EC by perpendiculars. Any arc to pass through B and E must have its center on a perpendicular at the middle point. The intersection therefore of these perpendiculars with the two first perpendiculars will be the centers for arcs BE and EC. This line might be the center line for a curved road or pipe. The construction may be checked by drawing the line of centers which must pass through E.

To Draw a Tangent to a Circle.—Fig. 74. Given the arc ACB and point of tangency C. Arrange a triangle in combination with the T-square (or another triangle) so that its hypotenuse passes through center O and point C.

Holding the T-square firmly in place turn the triangle about its square corner and move it until the hypotenuse coincides with C, giving the required tangent.

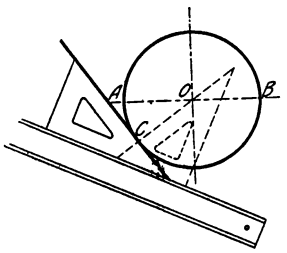

FIG 74.—Drawing a tangent.

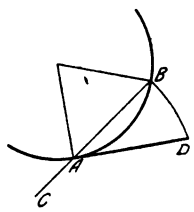

FIG. 75.—Length of arc.

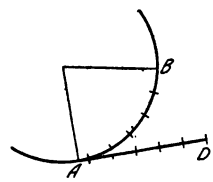

FIG. 76.—Length of arc.

To Lay off on a Straight Line the Approximate Length of a Circle-Arc.—Fig. 75. Given the arc AB. At A draw the tangent AD and chord AB produced. Lay off AC equal to half the chord AB. With center C and radius CB draw an arc intersecting AD at D, then AD will be equal in length to the arc AB (very nearly). If the given arc is greater than 60 degrees it should be subdivided.[1]

The usual way of rectifying an arc is to set the dividers to a space small enough as practically to coincide with the arc. Starting at B step along the arc to the point nearest A, and without lifting the dividers step off the same number of spaces on the tangent, as shown in Fig. 76.

Conic Sections.—In cutting a right circular cone by planes at different angles four curves called the *conic sections* are obtained,

[1] In this (Professor Rankine's) solution, the error varies as the fourth power of the subtended angle. At 60 degrees the line will be $\frac{1}{900}$ part short.

Fig. 77. These are the circle, cut by a plane perpendicular to the axis; the ellipse, cut by a plane making a greater angle with the axis than the elements do; the parabola, cut by a plane making the same angle with the axis as the elements do; the hyperbola, cut by a plane making a smaller angle than the elements do. These curves are studied mathematically in analytic

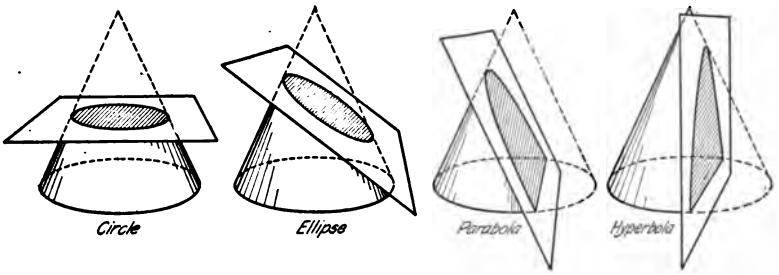

FIG. 77.—The conic sections.

geometry but may be drawn without a knowledge of their equations by knowing something of their characteristics.

The Ellipse.—Fig. 78. An ellipse is a curve generated by a point moving so that the sum of the distances from two fixed points, called the foci, is a constant, and is equal to the longest diameter, or major axis.

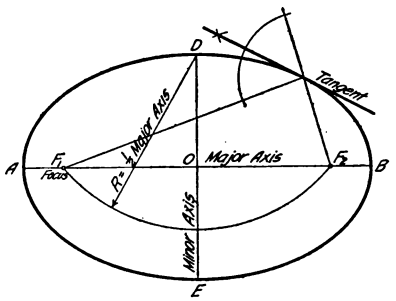

FIG. 78.—The ellipse.

The minor axis or short diameter, is the line through the center perpendicular to the major axis. The foci may be determined by cutting the major axis with an arc having its center at one end of the minor axis and a radius equal to one-half the major axis.

A tangent to an ellipse at any point may be drawn by bisecting the exterior angle between lines drawn from the point to the foci.

As an ellipse is the projection of a circle viewed obliquely it is met with in practice oftener than the other conics, aside from the circle, and draftsmen should be able to construct it readily, hence several methods are given for its construction, both as a true ellipse, and as an approximate curve made by circle-arcs. In the great majority of cases when this curve is required its long and short diameters, *i.e.*, its major and minor axes are known.

Ellipse—By Concentric Circles.—Fig. 79. This is a very accurate method for determining points on the curve. With *O* as center describe circles on the two diameters. From a number of points on the outer circle as *P* and *Q* draw radii *OP*, *OQ*, etc., intersecting the inner circle at *P'*, *Q'*, etc. From *P* and *Q* draw lines parallel to *OD*, and from *P'* and *Q'* lines parallel to *OB*. The intersection of the lines through *P* and *P'* gives one point

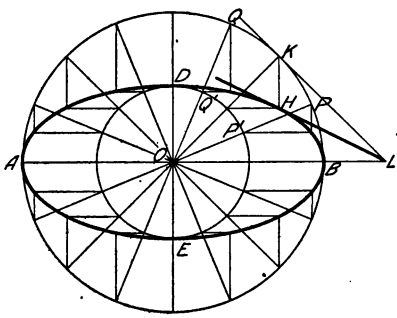

FIG. 79.—Concentric circle method.

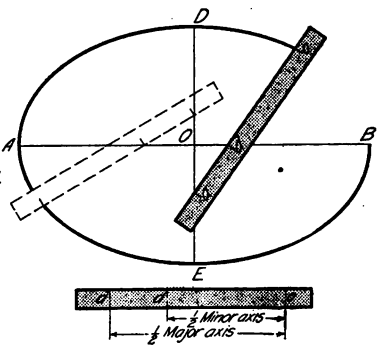

FIG. 80.—Trammel method.

on the ellipse. The intersection of the lines through *Q* and *Q'* another point, and so on. For accuracy the points should be taken closer together toward the major axis. The process may be repeated in the four quadrants and the curve sketched in lightly freehand, or one quadrant only may be constructed and the remaining three repeated by marking the French curve. A tangent at any point *H* may be drawn by dropping a perpendicular from the point to the outer circle at *K* and drawing the auxiliary tangent *KL* cutting the major axis at *L*. From *L* draw the required tangent *LH*.

Ellipse—Trammel Method.—Fig. 80. On the straight edge of a strip of paper, thin card-board or sheet of celluloid mark the distance *ao* equal to one-half the major axis and *do* equal to

one-half the minor axis. If the strip be moved keeping a on the minor axis and d on the major axis, o will give points on the ellipse. This method will be found very convenient, as no construction is required, but for accurate results great care should be taken to keep the points a and d exactly on the axes. The ellipsograph, Fig. 81, is constructed on the principle of this method.

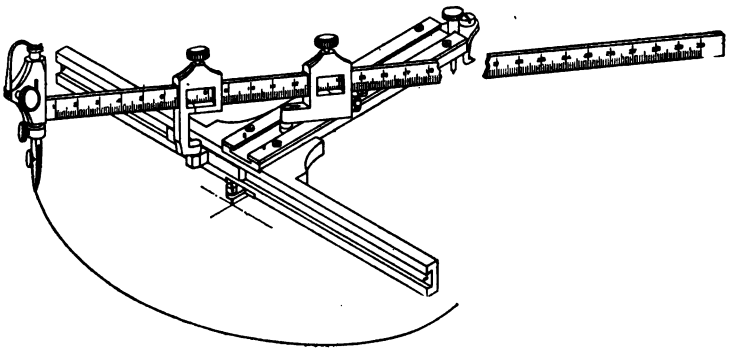

FIG. 81.—An ellipsograph.

Ellipse—Pin and String Method.—This well-known method sometimes called the "gardener's ellipse" is often used for large work, and is based on the mathematical principle of the ellipse. Drive pins at the points D, F_1, F_2, Fig. 78, and tie an inelastic thread or cord tightly around the three pins. If the pin D be removed and a marking point moved in the loop, keeping the cord taut, it will describe a true ellipse.

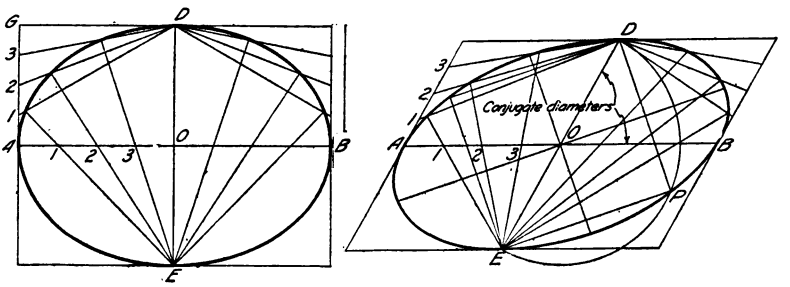

FIG 82.—Parallelogram method.

Ellipse—Parallelogram Method.—Fig. 82. This method may be used with either the major and minor axes or with any pair of conjugate diameters. On the diameters construct a parallelogram. Divide AO into any number of equal parts and AG into

the same number of equal parts, numbering the points from *A*. Through these points draw lines from *D* and *E* as shown. Their intersections will be points on the curve.

To Determine the Major and Minor Axes of an Ellipse, the Conjugate Axes Being Given.—The property of conjugate diameters is that each is parallel to the tangent to the curve at the extremities of the other. At *O* draw a semicircle with radius *OE*. Connect the point of intersection *P* of this circle and the ellipse with *D* and *E*. The major and minor axes will be parallel to the chords *DP* and *EP*.

Approximate Ellipse with Four Centers.—Fig. 83. Join *A* and *D*. Lay off *DF* equal to *AO* minus *DO*. Bisect *AF* by a perpendicular which will cross *AO* at *G* and intersect *DE* produced, at *H*. Make *OG'* equal to *OG* and *OH'* equal to *OH*. Then *G*, *G'*, *H* and *H'* will be centers for four arcs approximating the ellipse. The half of this ellipse when used in masonry construction is known as the three-centered arch.

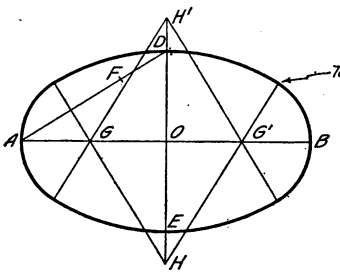

FIG. 83.—Approximate ellipse.

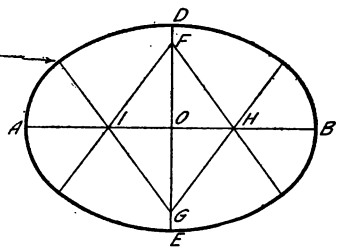

FIG. 84.—Approximate ellipse.

Another method of drawing a four-centered approximate ellipse, when the minor axis is at least two-thirds the major, is shown in Fig. 84. Make *OF* and *OG* each equal to *AB* minus *DE*. Make *OH* and *OI* each equal to three-fourths of *OF*. Draw *FH*, *FI*, *GH* and *GI*, extending them as shown. Draw arcs through points *D* and *E* with centers at *G* and *F*, and through *A* and *B* with centers *I* and *H*.

Approximate Ellipse With Eight Centers.—Fig. 85. When a closer approximation is desired, the eight-centered ellipse, known in masonry as the "five-centered arch" may be constructed. Draw the rectangle *AFDO*. Draw the diagonal *AD* and draw from *F* a line perpendicular to it intersecting the extension of the minor axis at *H*. Lay off *OK* equal to *OD* and on *AK* as a

diameter draw a semicircle intersecting the extension of the minor axis at *L*. Make *OM* equal to *LD*. With center *H* and radius *HM* draw the arc *MN*. With *A* as center and radius *OL* intersect *AB* at *Q*. With *P* as center and radius *PQ* intersect the arc *MN* at *N*, then *P*, *N* and *H* are centers for one-half of the semiellipse or "five-centered oval." This method is based on the principle that the radius of curvature at the end of the minor axis is the third proportional to the semiminor and semimajor axes, and similarly at the end of the major axis is the third proportional to the semimajor and semiminor axes. The intermediate radius found is the mean proportional between these two radii.

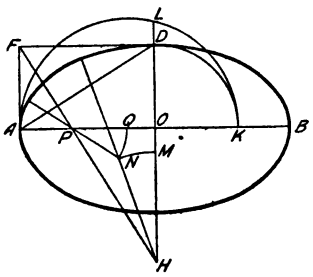

FIG. 85.—Approximate ellipse.

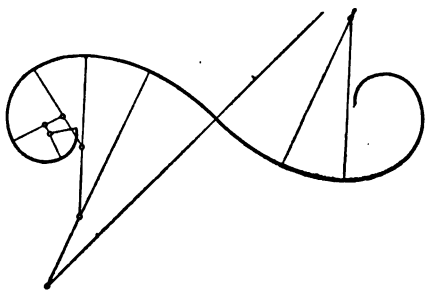

FIG. 86.—Curve inked with circle arcs.

It should be noted that an ellipse is changing its radius of curvature at every point, and that these approximations are not ellipses but simply curves of the same general shape.

Any non-circular curve may be approximated by tangent circle arcs, selecting a center by trial, drawing as much of an arc as will practically coincide with the curve, then changing the center and radius for the next portion, remembering always that if arcs are to be tangent, their centers must lie on the common normal at the point of tangency. Many draftsmen prefer to ink curves in this way rather than to use irregular curves. Fig. 86 illustrates the construction.

The Parabola is a curve generated by a point so moving that its distance from a fixed point, called the focus, is always equal to its distance from a straight line, called the directrix. One of the commercial uses of the parabola is in parabolic reflectors and search lights, a light when placed at the focus being reflected parallel to the axis.

To draw a parabola, having given the focus F and the directrix AB, Fig. 87. Draw the axis through F perpendicular to AB. Through any point, D, on the axis draw a line parallel to AB. With the distance DO from this line to AB as a radius, and F as a center, draw an arc intersecting the line, thus locating a point P on the curve. Repeat the operation with as many lines as needed for the curve.

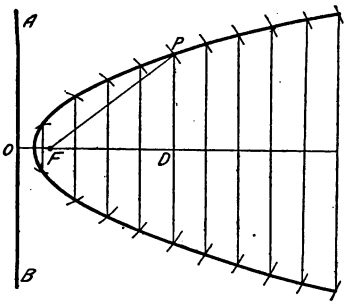

FIG. 87.—Parabola.

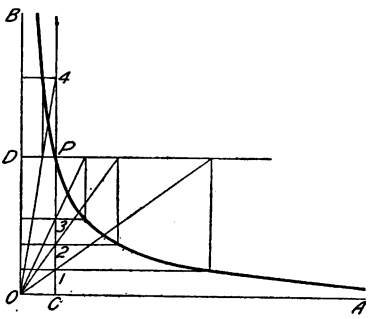

FIG. 88.—Hyperbola.

The Hyperbola.—The common case of the hyperbola of practical interest is the equilateral or rectangular hyperbola on its asymptotes, as representing the relation between the pressure and volume of steam or gas expanding under the law $pv = c$.

To draw the rectangular hyperbola. Fig. 88. Let OA and OB be the asymptotes and P any point on the curve (this might be the point of cut off on an indicator diagram). Draw PC and PD. Mark any points, 1, 2, 3, 4, on PC, through these points draw lines parallel to OA and through the same points lines to O. From the intersection of these lines with PD draw perpendiculars. The intersections of these perpendiculars with the corresponding horizontal lines give points on the curve.

Cycloidal Curves.—A cycloid is the curve generated by the motion of a point on the circumference of a circle rolled along a straight line. If the circle be rolled on the outside of another circle the curve is called an epicycloid; when rolled inside it is called a hypocycloid. These curves are used in drawing one system of gear teeth. To draw a cycloid, Fig. 89, divide the rolling circle into a convenient number of parts (say 12), lay off the rectified length of the circumference, with these divisions, on the tangent AB. Draw through C the line of the centers CD

and project the division points up to this line by perpendiculars. On these points as centers draw circles representing different positions of the rolling circle, and project across on these circles in order, the division points of the original circle. These intersections will be points on the curve. The epicycloid and hypocycloid may be drawn similarly as illustrated in Fig. 90.

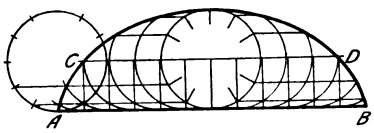

FIG. 89.—Cycloid.

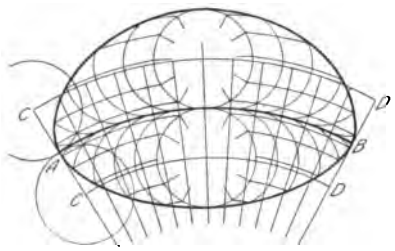

FIG. 90.—Epicycloid and hypocycloid.

The Involute.—An involute is the spiral curve traced by a point on a cord unwinding from around a polygon or circle. Thus the involute of any polygon may be drawn by extending its sides, as in Fig. 91, and with the corners of the polygon as successive centers drawing arcs terminating on the extended sides.

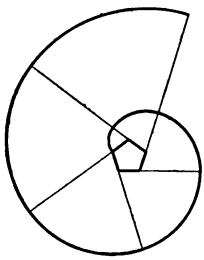

FIG. 91.—Involute of a pentagon.

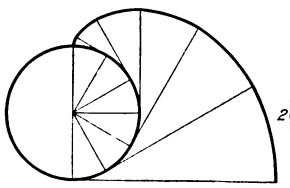

FIG. 92.—Involute of a circle.

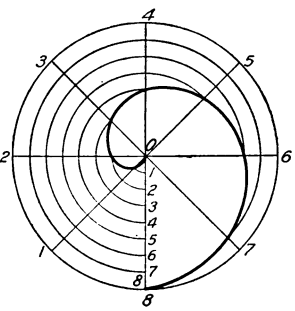

FIG. 93.—Spiral of Archimedes.

A circle may be conceived as a polygon of an infinite number of sides. Thus to draw the involute of a circle, Fig. 92, divide it into a convenient number of parts, draw tangents at these points, lay off on these tangents the rectified lengths of the arcs from the point of tangency to the starting point, and connect the points by a smooth curve. It is evident that the involute of a circle

is the limiting case of the epicycloid, the rolling circle becoming of infinite diameter. It is the basis for the involute system of gearing.

The Spiral of Archimedes.—Fig. 93 is a curve generated by a point moving uniformly along a line while the line revolves through uniform angles. To draw a spiral of Archimedes making one turn in a given circle, divide the circumference into a number of equal parts, drawing the radii and numbering them. Divide the radius *O*–8 into the same number of equal parts, numbering from the center. With *O* as a center draw concentric arcs intersecting the radii of corresponding numbers, and draw a smooth curve through these intersections. This is the curve of the heart cam, for converting uniform rotary motion into uniform reciprocal motion.

PROBLEMS

To be of value both as drawing exercises and as solutions, geometrical problems should be worked very accurately. The pencil must be kept very sharp, and comparatively light lines used. A point should be located by two intersecting lines, and the length of a line by two short dashes crossing the given line.

The following problems are dimensioned to fit a space not over $5'' \times 7''$.

1. Near the center of the space draw a horizontal line $4\frac{1}{2}''$ long. Divide it into 7 equal parts by the method of Fig. 64. Draw another line of the same length $\frac{1}{4}''$ above the first line and divide it into 7 equal parts using the bow spacers. Compare the divisions as obtained by the two methods. Apply the method of Fig. 65 and compare with previous methods.

2. Draw the diagonal of a $4'' \times 5''$ rectangle. Divide it into 9 equal parts.

3. Draw a vertical line $1''$ from left edge of space and $3\frac{7}{8}''$ long. Divide it into parts proportional to 1, 3, 5 and 7.

4. Same as Prob. 3, but divide into parts proportional to 1, 2, 3, 4, 2.

5. Draw a horizontal line $\frac{3}{4}''$ above bottom of space and $4\frac{1}{2}''$ long. On this line as a base construct a triangle having sides of $5\frac{5}{8}''$ and $3\frac{3}{8}''$. On the same base construct a triangle having sides of $4''$.

6. Near the center of the space draw a vertical line $2\frac{1}{2}''$ long, lower end $\frac{1}{2}''$ from bottom of space. Starting with this line construct triangles on each side of it having remaining sides of $2\frac{1}{2}''$ and $4\frac{11}{32}''$.

7. Construct a polygon as shown in Fig. 94, drawing the line *AB* of indefinite length $\frac{5}{8}''$ above bottom of space. From *B* draw and measure *BC*. Proceed in the same way for the remaining sides. The angles may all be obtained by proper combinations of the two triangles.

8. Draw line *AB* making an angle of 15° with the horizontal. With this line as a base transfer the polygon of Fig. 94.

9. Draw a regular hexagon having a distance across corners of 4″.

10. Draw a regular hexagon one side of which is 1⅞″.

11. Draw a regular hexagon having a distance between parallel sides of 3⅜″.

12. Draw a regular octagon having a distance between parallel sides of 3 1/16″.

13. Draw a regular octagon one side of which is 1¼″.

14. From the upper left-hand corner of the space draw a 45° line. From the upper right-hand corner draw a line making 60° with the horizontal. Draw a circle having a radius of 1¼″ tangent to the two lines.

15. Locate three points as follows: Point *A* 3½″ from left edge of space and ¾″ from top of space; *B* 5½″ from left edge and 2¼″ from top; *C* 2″ from left edge and 3½″ from top. Draw a circle through *A*, *B* and *C*.

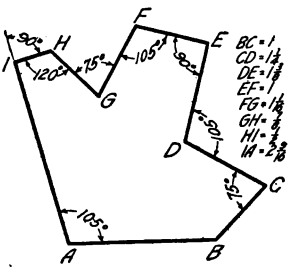

FIG. 94.—(Problem 7.)

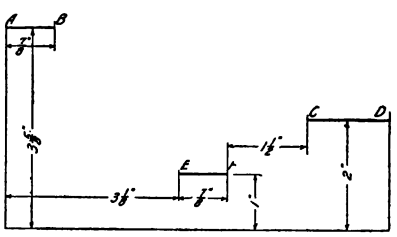

FIG. 95.—(Problem 18.)

16. Construct a triangle having three sides as follows: 2¼″, 3″, 3¾″. Draw a circle passing through the corners of the triangle.

17. Construct an ogee curve joining two parallel lines *AB* and *CD* as in Fig. 73, making $X = 4''$, $Y = 2\frac{1}{2}''$ and $BE = 3''$. Consider this as the center line for a rod 1¼″ diameter and draw the rod.

18. Lay out lines *AB*, *CD* and *EF* as in Fig. 95. Draw ogee curves joining *AB* and *CD*, *AB* and *EF*, and *EF* and *CD*.

19. Draw an arc of a circle having a radius of 3 13/16″, with its center ½″ from top of space and 1½″ from left edge. Find the length of an arc of 60° by construction, and compute the length arithmetically and check the result.

20. Find the length of the portion of the rod between *B* and *C* in Prob. 17.

Curve Problems

In locating a curve the number of points to be determined will depend upon the size of the curve and the rate of change of curvature. More points should be found near the sharp turns. For the most of the following, points should be about ¼″ apart.

21. Draw an ellipse having a major axis of 4½″ and a minor axis of 3″. Use method of Fig. 80.

22. Draw an ellipse having a major axis of 4⅝″ and a minor axis of 1½″ Use method of Fig. 79.

23. Draw an ellipse having a major axis of $4\frac{7}{16}''$ and distance between foci of $3\frac{1}{2}''$.

24. Draw an ellipse having its major axis horizontal and a distance between foci of $3\frac{13}{16}''$. One point on the ellipse is $1\frac{1}{2}''$ to left of minor axis and $\frac{7}{8}''$ above major axis.

25. Draw the left half of an ellipse with its major axis vertical and $2\frac{1}{2}''$ long. Its minor axis is $1\frac{1}{4}''$. Using the above major axis as a minor axis draw the right half of an ellipse which has a focus 3" to the right of the center.

26. Draw an ellipse having a minor axis of $2\frac{3}{16}''$ and a distance between foci of $3\frac{1}{4}''$. Major axis horizontal. Draw a tangent at a point $1\frac{3}{8}''$ to the right of the minor axis.

27. Draw an ellipse having a horizontal major axis 4" long. A tangent to the ellipse makes an angle of 60° with the minor axis and intersects the minor axis $1\frac{3}{4}''$ from the center.

28. Draw an approximate ellipse having a major axis of 5" and a minor axis of $3\frac{1}{2}''$. Use method specified by instructor.

29. Draw an approximate ellipse having a major axis of 6". Use method of Fig. 84. Make the minor axis as small as the method permits.

30. Using the same center lines draw two ellipses, the first with major axis 6" and minor axis 4", the second with major axis $4\frac{1}{2}''$, minor axis $2\frac{1}{2}''$.

31. Draw an ellipse having conjugate axes of $4\frac{3}{4}''$ and $2\frac{3}{4}''$, and making an angle of 75° with each other. Determine the major and minor axes.

32. Draw a parabola, axis horizontal, with directrix AB $4\frac{3}{8}''$ long and focus $\frac{1}{2}''$ from it (Fig. 87). Directrix 1" from left border.

33. Draw a parabola, axis vertical with directrix AB $5\frac{3}{8}''$ long; focus $1\frac{1}{2}''$ from it.

34. Draw an equilateral hyperbola passing through a point P $\frac{1}{2}''$ from OB and $2\frac{1}{2}''$ from OA (Fig. 88).

35. Draw an equilateral hyperbola passing through point P 4" from OB and $\frac{3}{8}''$ from OA (Fig. 88).

36. Draw the involute of an equilateral triangle, one side of which is $\frac{1}{2}''$.

37. Draw the involute of a right triangle, the two sides of which are $\frac{3}{8}''$ and $1\frac{1}{8}''$.

38. Draw one-half turn of the involute of a circle $3\frac{1}{4}''$ in diameter, whose center is 1" from the left edge of space. Compute the length of the last tangent and compare with the measured length.

39. Draw a cycloid. Rolling circle $1\frac{1}{4}''$ in diameter.

40. Draw a spiral of Archimedes making one turn in a circle 4" in diameter.

CHAPTER V

LETTERING

To give all the information necessary for the complete construction of a machine or structure there must be added to the "graphical language" of lines describing its shape, the figured dimensions, notes on material and finish, and a descriptive title, all of which must be lettered, freehand, in a style that is perfectly legible, uniform and capable of rapid execution. So far as its appearance is concerned there is no part of a drawing so important as the lettering. A good drawing may be ruined, not only in appearance but in usefulness, by lettering done ignorantly or carelessly, as illegible figures are very apt to cause mistakes in the work.

Lettering is *not* mechanical drawing. It is a distinct subject in design, based on accepted forms. There are two general classes of persons who are interested in its study, first, those who have to use letters and words to convey information on drawings, second, those who use lettering in design, as art students, artists and craftsmen. The first class is concerned mainly with legibility and speed, the second with beauty, but the foundation principles are the same for both. In this book we are interested in lettering only as used in the different kinds of engineering drawing.

The parent of all styles is the "Old Roman." It is the most artistic and beautiful letter and is the standard for designers and architects. The variation known as "Modern Roman" is used in topographical drawing. For working drawings the simplified forms called "Commercial Gothic" are used almost exclusively.

In the execution of all lettering there are two general divisions, *drawn* or *built up* letters, and *written* or *single stroke* letters. Roman letters are usually drawn in outline and filled in; commer-

cial gothic, except in larger size, are generally made in single stroke.

Large, carefully drawn letters are sometimes finished with instruments, but the persistent use by some draftsmen of kinds of mechanical caricatures known as "geometrical letters," "block letters," etc., made up of straight lines, and ruled in with T-square and triangle is to be condemned entirely.

General Proportions.—There is no one standard for the proportions of letters, but there are certain fundamental points in design and with the individual letters certain characteristics that must be thoroughly learned by study and observation before composition into words and sentences may be attempted. Not only do the widths of letters in any alphabet vary, from I, the narrowest, to W, the widest, but different alphabets vary as a whole. Styles narrow in their proportion of width to height are called "COMPRESSED LETTERS" and are used when space is limited. Styles wider than the normal are called **"EXTENDED LETTERS."**

The proportion of the thickness of stem to the height varies widely, ranging all the way from $\frac{1}{3}$ to $\frac{1}{20}$. Letters with heavy stems are called **bold face** or **black face,** those with thin stems *light face.*

The Rule of Stability.—In the construction of letters the well-known optical illusion in which a horizontal line drawn across the middle of a rectangle appears to be below the middle must be provided for. In order to give the appearance of stability such letters as B E K S X Z, with the figures 3 and 8 must be drawn smaller at the top than the bottom. To see the effect of this illusion turn a printed page upside down and notice the letters mentioned.

Other letters have to be modified to overcome the tendency of the eye to average areas. A round letter, as O, C or S, drawn the same height as a square letter, as M, H or E, will appear smaller, as it touches the guide line at only one point. In order to give the appearance of equal height the round letters must extend a trifle over the guide line on top and bottom. This is even more noticeable with angular letters, as A and V, whose sharp points must either be extended over the line or flattened at the line. These are delicate refinements and any exaggeration is worse than not observing them at all.

Single Stroke Lettering.—By far the greatest amount of lettering on drawings is done in a rapid "single stroke" letter either

vertical or inclined and every engineer must have absolute command of these styles. The ability to letter well can be acquired only by continued and careful practice, but it can be acquired by anyone with normal muscular control of his fingers, who will take the trouble to observe carefully the shapes of the letters, the sequence of strokes composing them and the rules for composition; and will practice faithfully and intelligently. It is not a matter of artistic talent, nor even of dexterity in handwriting. Many draftsmen letter well who write very poorly.

The term "single stroke" or "one-stroke" does not mean that the entire letter is made without lifting the pen, but that the width of the stroke of the pen is the width of the stem of the letter. For the desired height therefore a pen must be selected which will give the necessary width of stroke.

LEONARDT 516 F

HUNT 512: Gillott 1032

Gillott 404: Spencerian No. 1

Gillott 303 For very fine lines Gillott 170 and 290

FIG. 96.—Pen strokes, full size.

Lettering Pens.—There are many steel writing pens adaptable for lettering. The sizes of strokes, reproduced full size, of a few popular ones are illustrated in Fig. 96. For large work, from ¼ inch to 2 inches high, the Payzant pens, Fig. 97, are used extensively. A number of other special pens have been designed for lettering.

FIG. 97.—A Payzant pen.

A penholder with cork grip (the "small" size), should be chosen and the pen set in it firmly. Many prefer to ink the pen with the quill filler rather than to dip it into the ink bottle. The surplus ink should be shaken back into the bottle. Getting too much ink on the pen is responsible for appearances of the kind

shown in Fig. 98. Always wet a new pen and wipe it thoroughly before using, to remove the oil film. Some draftsmen prepare a new pen by dropping it in alcohol or by holding it in a match flame for two or three seconds. A lettering pen well "broken-in" by use is worth much more than a new one, and should be given the same care as other drawing instruments. A pen that has been used in writing ink should never be put in drawing ink. When in use a pen should be wiped clean frequently, with a cloth penwiper.

EHMNWTZ

FIG. 98.—Too much ink.

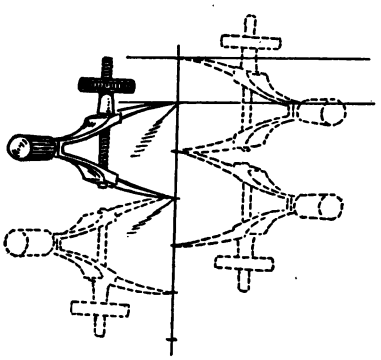

FIG. 99.—Spacing lines.

Other Materials.—It is important to have a good quality of paper with smooth, hard surface for practising lettering. Weston's Ledger is recommended. Sometimes cross-section or specially lined paper is used. Plain paper should be ruled with pencil guide lines for the tops and bottoms of the letters. Fig. 99 illustrates the method of spacing lines. Mark the height of the letter on the first line, then set the bow spacers to the distance wanted between base lines, and step off the required number of lines. With the same setting step down again from the upper point, thus obtaining points for the top and bottom for each line of

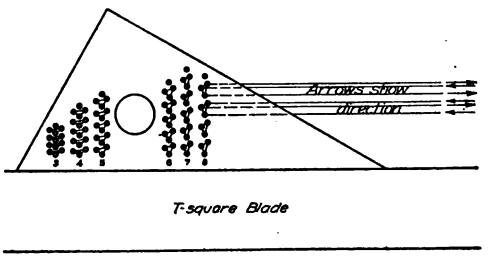

FIG. 100.—Braddock triangle.

letters. The Braddock triangle, Fig. 100, is very convenient for drawing guide lines as it requires no preliminary spacing. The numbers indicate heights of capitals in thirty-seconds of an inch.

Guide lines should be drawn lightly with a sharp hard pencil,

4H or 6H. Letters are drawn with a softer pencil, 2H or H, with long conical point, and the habit should be formed of rotating the pencil in the fingers after each few strokes to keep the point symmetrical.

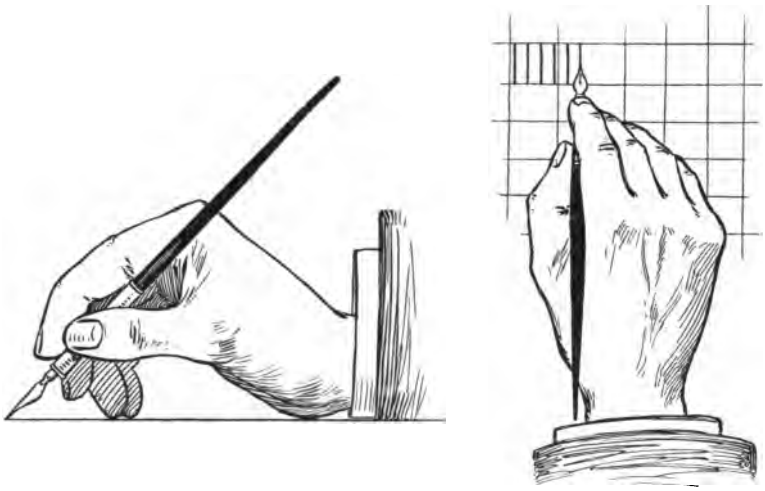

FIG. 101.—Position for lettering.

Both pencil and pen should be held easily, as in writing, in the position shown in Fig. 101, the strokes drawn with a steady even motion, and a slight, uniform pressure on the paper, not enough to spread the nibs of the pen.

A B C D E F G H I

J K L M N O P Q R

S T U V W X Y Z &

1 2 3 4 5 6 7 8 9 0

FIG. 102.—Vertical single stroke capitals.

Single Stroke Vertical Caps.—The vertical single stroke "commercial gothic" letter shown in Fig. 102 is a standard for titles, reference letters, etc. In the proportion of width to height the

general rule is, that the smaller the letters the more extended their width should be. A low extended letter is more legible than a high compressed one, and at the same time makes a better appearance. This letter is seldom used in compressed form.

The first requirement is to learn the form and peculiarity of each of the letters. Too many persons think that lettering is simply "printing" in the childish way learned in the primary grades. There is an individuality in lettering often nearly as marked as in handwriting, but it must be based on a careful regard for the fundamental letter forms.

In the following figures the vertical capitals have been arranged in family groups. The shape of each letter, with the order and direction of the strokes forming it must be studied carefully and the letter practised until its construction and form are perfectly familiar. The first studies should be made in pencil to large size, perhaps $\frac{3}{8}''$ high; afterward to smaller size directly in ink.

Vertical strokes are all made downward, and horizontal strokes from left to right. Always draw both top and bottom guide lines. The widths of the analyzed letters are shown in comparison with a square equal to the height. The letters are slightly extended and it will be noted that many of the letters practically fill the square.

The I H T Group.—Fig. 103. The letter I is the foundation stroke. It may be found difficult to keep the stems vertical, if so direction lines may be drawn lightly as in Fig. 101 an inch or so apart, to aid the eye. The H is nearly square, and, observing the rule of stability, the cross bar is just above the center. The top of the T is drawn first to the full width of the square and the stem started accurately at its middle point.

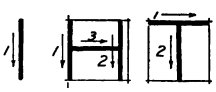

FIG. 103.

The L E F Group.—Fig. 104. The L is drawn in two strokes but without lifting the pen from the paper. Note that the first two strokes of the E are the same as the L, that the third or upper stroke is slightly shorter than the lower, the last stroke two-thirds as long, and just above the middle. F has the same proportions as E.

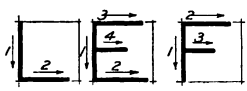

FIG. 104.

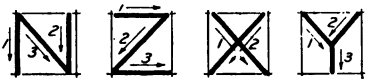

Fig. 105.

The N Z X Y Group.—Fig. 105. The parallel sides of N are generally drawn first, but some prefer to make the strokes in consecutive order. Z is drawn without lifting the pen. Z and X are both started inside the width of the square on top and run to full width on the bottom. This throws the crossing point of the X above the center. The junction of the Y strokes is below the center.

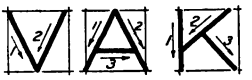

Fig. 106.

The V A K Group.—Fig. 106. V is slightly narrower than A, which here is the full width of the square. Its bridge is one-third up from the bottom. The second stroke of K strikes the stem one-third up from the bottom, the third stroke branches from it in a direction starting from the top of the stem.

Fig. 107.

The M W Group.—Fig. 107. These are the widest letters. M may be made either in consecutive strokes, or by drawing the two vertical strokes first, as with the N. W is formed of two narrow V's. Note that with all the pointed letters the width at the point is the width of the stroke, that is, the center lines of the strokes meet at the guide lines.

Fig. 108.

The O Q C G Group.—Fig. 108. In this extended alphabet the letters of the "O" family are made as full circles. The O is made in two strokes, the left side a longer arc than the right, as the right side is harder to draw. Make the kern of the Q straight or nearly straight. C and G of large size can be drawn more accurately with an extra stroke at the top, while in smaller ones the curve is drawn in one stroke. Note that the bar on the G is halfway up and does not extend past the vertical line.

Fig. 109.

The D U J Group.—Fig. 109. The top and bottom strokes of D must be horizontal. Failure to observe this is a common fault with beginners. U in larger letters is formed of two parallel strokes to which the bottom stroke is added. For smaller letters it may be made

in two strokes curved at the bottom to meet. J has the same construction as U.

Fig. 110.

The P R B Group.—Fig. 110. With P R and B the number of strokes used depends upon the size of the letter. For large letters the horizontal lines are started and the curves added, but for smaller letters only one stroke for each lobe is needed. The middle lines of P and R are on the center line, that of B observes the rule of stability.

The S 8 3 Group.—Fig. 111. The S, 8 and 3 are closely related in form, and the rule of stability must be observed carefully. For a large S three strokes may be used, for a smaller one two strokes, and for a very small size, one stroke only is best. The 8 may be made on the S construction in three strokes, or in "head and body" in four strokes. A perfect 3 should be capable of being finished into an 8. The 3 with flat top, sometimes seen, should not be used, on account of the danger of mistaking it for a 5.

Fig. 111.

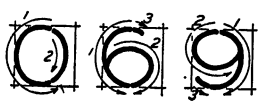

Fig. 112.

The 0 6 9 Group.—Fig. 112. The cipher is slightly narrower than the letter O. The backbones of the 6 and 9 have the same curve as the cipher, which with both figures are made first. The lobes are two-thirds the height of the figure.

The 2 5 7 & Group.—Fig. 113. The secret of the 2 lies in getting the reverse curve to cross the center of the space. The bottom of 2 and the top of 5 and 7 should be straight lines. The second stroke of 7 terminates directly below the middle of the top stroke. Its stiffness is relieved by curving it slightly at the lower end. The ampersand (&) is made in three strokes for large letters and two for smaller ones, keeping its axis vertical.

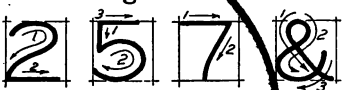

Fig. 113.

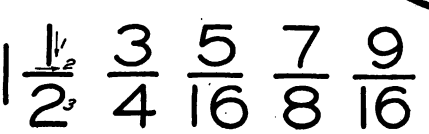

Fig. 114.

The Fraction Group.—Fig. 114. Fractions are always made with horizontal vinculum. The figures are two-thirds the

height of the whole numbers, with a clear space above and below the line, making the total height of the fraction nearly twice the cap height. Much practice should be given to numerals and fractions, combining them into dimensions, following the conventional rules on page 168. A useful practice sheet of figures alone may be made by designing a table of decimal equivalents. See appendix for table.

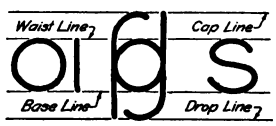

FIG. 115.

Vertical Lower Case.—The single stroke vertical lower-case letter is not commonly used on machine drawings but is used extensively in map drawing. It is the standard letter for hypsography in government topographical drawing. The bodies are made two-thirds the height of the capitals, with the ascenders extending to the cap line and the descenders dropping the same distance below. The basis of the letter as used with the extended capitals above is the combination of a circle and a straight line, as shown in enlarged form in Fig. 115. The alphabet, with some alternate shapes, is shown in Fig. 116.

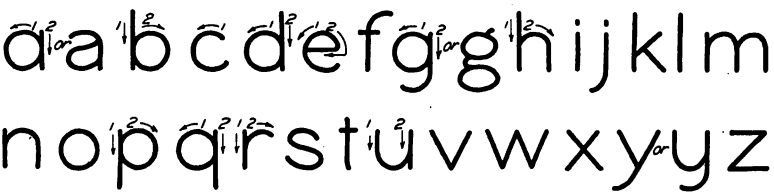

FIG. 116.—Vertical single stroke lower case.

Single Stroke Inclined Caps.—The single stroke inclined letter is preferred instead of the upright by many, including the majority of structural steel draftsmen. The order and direction of strokes are the same as in the upright form. This letter may be compressed but usually is not extended

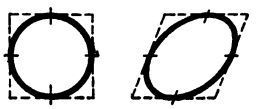

FIG. 117.

If a rectangle containing a flexible O should be inclined the curve would take the form illustrated in Fig. 117 sharp in the upper right-hand and lower left-hand corners and flattened out in the other two. It is the observance of this characteristic

that is the chief secret of success with the inclined form. Fig. 118 illustrates this with several of the curved letters.

A convenient slope for the inclined letter is to the proportion of 2 to 5, made by laying off two units on a horizontal line and five on a vertical line. Triangles of about this angle are sold. Direction lines should be drawn until one has become very proficient in keeping the letters to a uniform slant. The snap and swing of professional work is due largely to two things; keeping the letters full size and close together, and of uniform slope. The beginner's invariable mistake is to cramp the letters and space them too far apart.

FIG. 118.

FIG. 119.

Particular care must be observed with the letters having sloping sides as *A V W*. The sloping sides of these letters make equal angles on each side of the direction line, as shown in Fig. 119.

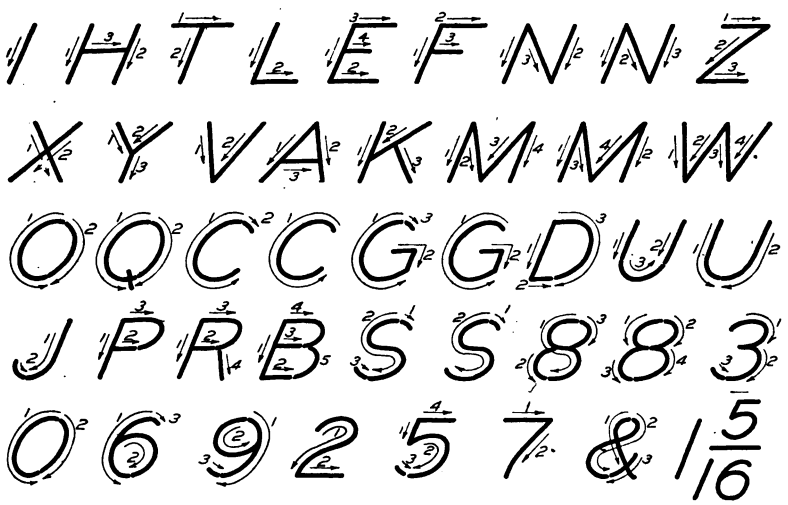

FIG. 120.—Single stroke inclined capitals.

The bridge of the *A* and *H* must be kept horizontal, and the shape of the *R* noted carefully. The alphabet in family order is given in Fig. 120.

Single Stroke Inclined Lower Case.—The inclined lower-case letters, Fig. 121 are drawn with bodies two-thirds the height of the capitals. This letter is generally known as the Reinhardt letter, in honor of Mr. Charles W. Reinhardt who first systematized its construction. It is the minuscule letter reduced to its lowest terms, omitting all unnecessary hooks and appendages. It is very legible and effective, and after its swing has been mastered can be made very rapidly. The lower-case letter should be used in all notes and statements on drawings for the two reasons given above, (1) it is read much more easily than all caps as we read words by the word-shapes and are familiar with these shapes in the lower-case letter, (2) it can be done faster.

FIG. 121.—Single stroke inclined lower case.

FIG. 122.

All the letters of this alphabet are based on two elements, the straight line and the ellipse. The general direction of strokes is always downward or from left to right. Fig. 122 illustrates the straight line letters. Note that the dots of *i* and *j* and the top of the *t* are not on the cap line but slightly below, at a height called the "t line." All other ascenders touch the cap line. The slant side letters *v w x* and *z* are the same as the capitals with the sides making equal angles on each side of the line of slope. The *j* and *y* are curved at the drop line, the other letters of this group are made entirely of straight lines. Special care must be taken with *v w x* to keep the angles equal on each side of the direction line.

FIG. 123.

Fig. 123 shows the construction of the "loop letters," made with a partial ellipse whose axis is inclined 45 degrees, in combination with a straight line. A variation known as the "pumpkin

seed" letter, Fig. 124, is used by some draftsmen. In lettering rapidly the loop letters tend to assume this form.

FIG. 124.—"Pumpkin seed" letters.

The *c*, *e* and *o*, Fig. 125 are based on the same ellipse as the capitals, not inclined quite as much as the loop letter ellipse. The *e* and *o* are made in two strokes as shown. In very rapid work *o*, *v* and *w* are often made in one stroke. The *s* is also similar to the capital, but except in letters more than 1/8" high is made in one stroke.

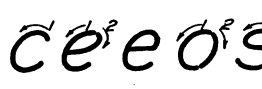

FIG. 125.

FIG. 126.

Fig. 126 shows the "hook letter" group. The important point in this group is to make the hook in a very sharp turn. The alternate form of *y* may be preferred to the straight line form.

The single stroke letter may be very much compressed and still be clear and legible, Fig. 127.

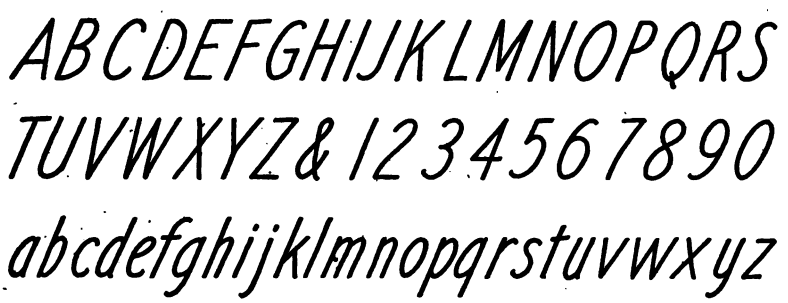

FIG. 127.—Single stroke compressed letters.

Composition.—Composition in lettering has to do with the selection of appropriate styles and sizes of letters, arrangement and spacing. Proper spacing of letters and words is of even more importance than the formation of the individual letters. Letters are not spaced at equal distances along the guide lines, but so that the areas of white spaces, the irregular backgrounds between the

letters, are approximately equal, making them *appear* to be spaced uniformly. Each letter is spaced with reference to its shape and the shape of the letter preceding it. Thus adjacent letters with straight sides would be spaced farther apart than those with curved sides. Sometimes combinations such as LT or AV may even overlap. The entire word or line must be studied to find what combination will set the area. It may be a word with round letters in it, or a combination like LA. Definite rules for spacing are not successful; it is a matter of artistic judgment. Fig. 128 illustrates word composition.

FIG. 128.—Spacing of letters and words.

The sizes of letters to use in any particular case may be determined better by sketching them in lightly, than by judging from the guide lines alone. A finished line of letters always looks larger than the guide lines would indicate. Avoid the use of a coarse pen for small sizes, as well as one making thin wiry lines for large sizes. Before inking a line of penciled letters rub the pencil marks so the excess graphite will not "muddy" the ink.

When CAPS AND SMALL CAPS are used the height of the SMALL CAPS should be about four-fifths of the caps.

Words should be spaced so as to be read easily and naturally. The clear distance between words (except in compressed lettering), should never be less than a space equal to the height of the letter, nor more than twice this space. The clear distance between lines may vary from ½ to 1½ times the height of the caps.

The appearance of notes with several lines is improved by keeping the right edge as straight as possible as well as the left. Paragraphs should always be indented. As soon as the letter forms have been mastered all the practice should be directed to composition.

Titles.—In the composition of a title for a drawing, the wording required should first be written out and divided into lines to give

the best display. The usual form is the symmetrical title, balanced on a center line. For this form the letters in each line are counted, a space counting as a letter, Fig. 129, the size and spacing of lines determined and each line started from its middle letter at the center line. It is sketched in lightly and finished as shown.

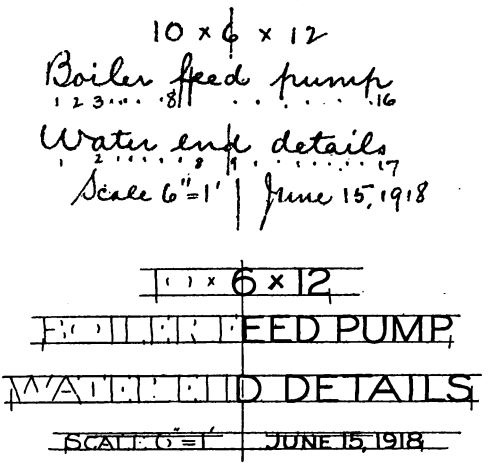

FIG. 129.—Title composition.

Outlined Commercial Gothic.—Thus far the so-called "gothic" letter has been considered only as a single stroke letter. For sizes larger than say five-sixteenths of an inch, or for bold face letters, it is drawn in outline and filled in solid. For a given size this letter is readable at a greater distance than any other style, hence would be used in any place where legibility is the principal requirement. The stems may be from one-tenth to one-fifth of the height, and much care must be exercised in keeping them to uniform width at every point on the letter. In inking a penciled outline keep the *outside* of the ink line on the pencil line, otherwise the finished letter will be heavier than expected.

Making two strokes in place of one, the general order and direction is similar to the single stroke analysis, as shown in the typical examples of Fig. 130. Free ends such as on C, G and S are cut off perpendicular to the stem. The stiffness of large letters is sometimes relieved by finishing the ends with a slight spur as shown on the "M." The figure shows the characteristic appearance of the letters of this alphabet.

The Roman Letter.—The Roman letter has been mentioned as the parent of all the styles however diversified which are in use today, and although there are many variations of it there may be said to be three general forms, (1) the early or classic, (2) the renaissance, (3) the modern. The first two are very similar in effect and the general term "Old Roman" is used for both.

The Roman letter is composed of two weights of lines, corresponding to the down stroke and the up stroke of the broad reed pen with which it was originally written. It is an inexcusable fault to shade a Roman letter on the wrong stroke.

FIG. 130.—Commercial gothic construction.

Rule for Shading.—All horizontal strokes are light, all vertical strokes are heavy, except in M, N and U. Trace the shape of the letter from left to right, down strokes are heavy and up strokes are light.

Fig. 131 is an Old Roman alphabet with the width of the body stroke one-tenth of the height of the letter and light lines slightly over one-half this width. The Old Roman is the architect's one general purpose letter. A single stroke adaptation of it, Fig. 132, is generally used on architectural working drawings.

Modern Roman.—Civil Engineers in particular must be familiar with the Modern Roman as it is the standard letter for map titles and the names of civil divisions, as countries and cities. It is a difficult letter to draw, and can only be mastered by careful attention to details. The heavy or "body strokes" are from one-sixth to one-eighth the height of the letter and the thin or

Fig. 131.—Old Roman.

"hair lines" comparatively very light. Fig. 133 is an alphabet made on a scale whose unit is one-seventh of the height. By dividing the required height into seven equal parts, a small paper

FIG. 132.—Old Roman single stroke.

scale, as shown, may be made to aid in penciling the letters, using the widths given.

The order and direction of strokes used in drawing Roman

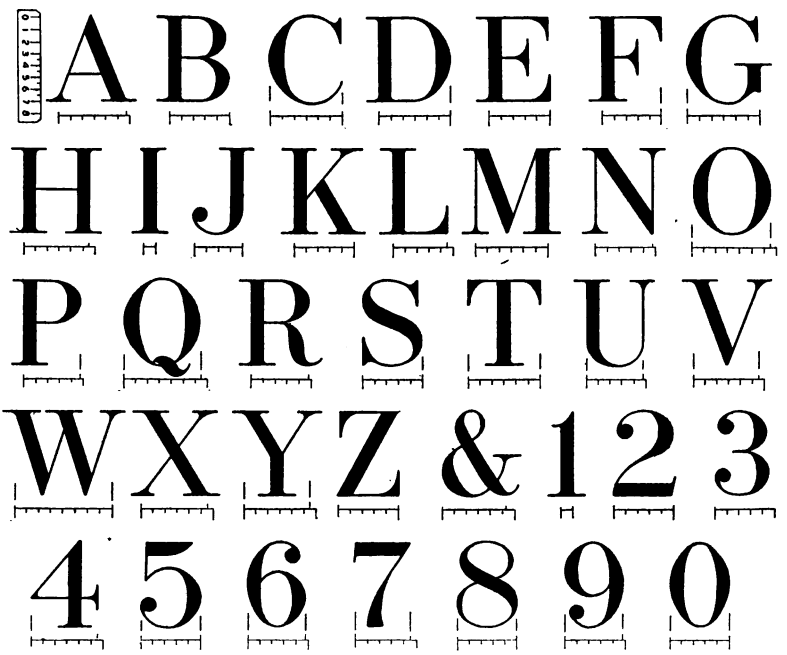

FIG. 133.—Modern Roman.

letters is illustrated in the typical letters of Fig. 134. The "serifs" on the ends of the strokes extend one space on each side, and are joined to the stroke by small fillets. Roman letters are spoiled oftener by poor serifs and fillets than in any other way.

For letters smaller than one-quarter inch it is best to omit the body stroke fillets altogether. It will be noticed that the curved letters are flattened slightly on their diagonals.

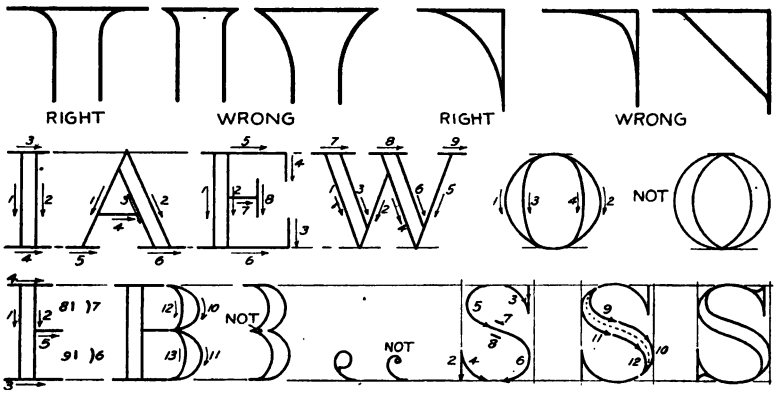

FIG. 134.—Modern Roman construction.

The Roman letter may be extended or compressed, as shown in Fig. 135. For these a scale for widths may be made, longer or shorter than the normal scale. For example, the compressed letters of Fig. 135 are made with a scale three-fourths of the height divided into sevenths.

EXTENDED ROMAN
BCGHJKLPQSUVW

COMPRESSED ROMAN-BHKTWG

FIG. 135.—Modern Roman extended and compressed.

Inclined Roman.—Inclined letters are used for water features on maps. Fig. 136 gives the inclined Roman, made to the same proportions as the upright of Fig. 133. The slope may be from 65 to 75 degrees. Those shown are inclined "2 to 5." The lower-case letters in this figure are known as "stump" letters. For small sizes their lines are made in one stroke of a fine flexible pen, while larger sizes are drawn and filled in.

FIG. 136.—Inclined Roman and stump letters.

EXERCISES

The following exercises are designed for a 5″ × 7″ space. The first ten, Series I and II, are for vertical letters, with the same specifications for Series III and IV, for inclined letters.

Series I. Single Stroke Vertical Caps

1. Large letters in pencil, for careful study of the shapes of the individual letters. Starting 9/16″ from top border line draw guide lines for five lines of 3/8″ letters, with clear distance between lines 1/2″. Draw each of the straight line letters, I H T L E F N Z X Y V A K M W four times in pencil only, making a careful study of the letters with the order and direction of strokes as given in Figs. 103 to 107. Fig. 137 is a full-size reproduction of one corner of this exercise.

2. Same as Ex. 1, for curved line letters, O Q C G D U J B P R S. Study Figs. 108 to 111.

3. Same as Ex. 1, for figures and fractions, 3 8 6 9 2 5 & 1/2 3/4 5/8 7/16 9/32. Study Figs. 111 to 114.

4. Composition. Same layout as for Ex. 1. Read paragraph on composition, then letter the following five lines in pencil. (1) WORD COMPOSITION, (2) TOPOGRAPHIC SURVEY, (3) TOOLS & EQUIPMENT, (4) MILITARY AVIATOR, (5) LIBERTY MOTOR, 1918.

5. Quarter-inch vertical letters in pencil and ink. Starting 1/4″ from top, draw guide lines for nine lines of 1/4″ letters Draw each letter in group

order, first four times in pencil then four times directly in ink. Fig. 138 shows one corner of this exercise.

6. One-eighth inch vertical letters. Starting ¼" from top border draw guide lines for 18 lines of ⅛" letters. Make each letter and numeral eight times directly in ink. Fill the lines remaining with a portion of the paragraph on composition on page 63.

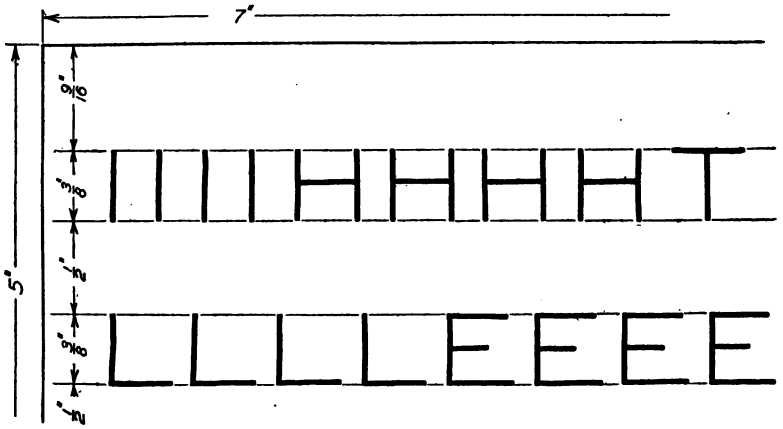

Fig. 137.

Series II. Single Stroke Vertical Lower Case

7. Large letters in pencil, for use with ⅜" caps. Starting ⅜" from top draw guide lines for seven rows of letters, with cap line, waist line, base line and drop line for each. This can be done quickly by spacing ⅛" uniformly down the sheet, bracketing the cap and base lines to avoid mistake. Make each letter of the alphabet four times in pencil only. Fig. 139 shows one corner of this exercise.

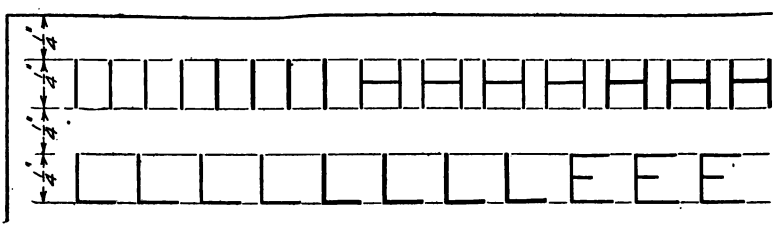

Fig. 138.

8. Composition. Same layout as Ex. 7. Letter a portion of the paragraph on composition, page 63.

9. Small vertical lower case, in pencil and ink, for use with 3/16" caps. Starting ½" from top draw cap, waist and base lines for thirteen lines of letters (Braddock No. 6 spacing). Make letter "a" six times in pencil, then six times in ink. Follow with each letter of the alphabet. Fig. 140.

10. Composition. Same spacing as Ex. 9. Letter the opening paragraph of this chapter in vertical lower case.

Series III. Single Stroke Inclined Capitals

11 to 16. Same spacing and specifications as Series I, Ex. 1 to 6, but for inclined letters. Study Fig. 120.

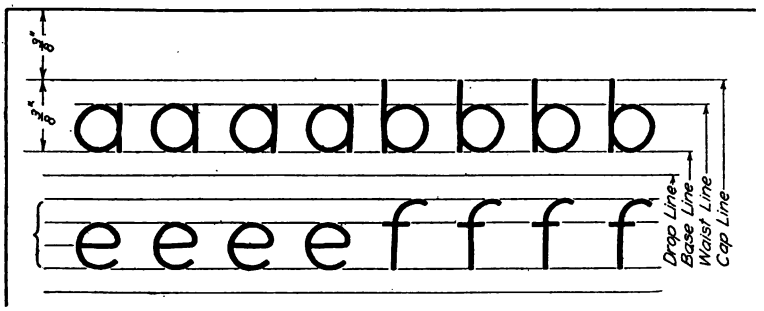

FIG. 139.

Series IV. Single Stroke Inclined Lower Case

17 to 20. Same as Series II. Ex. 7 to 10 but for inclined letters. Study Figs. 121 to 126.

Series V. Heavy Stroke Commercial Gothic

21 and 22. Lay out three lines of $1\frac{1}{16}''$ letters, with $\frac{5}{8}''$ between lines. Make the alphabet and numerals in group order.

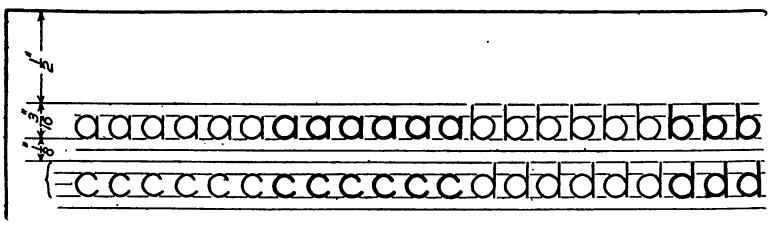

FIG. 140.

Series VI. Roman Letters

23 and 24. Lay out three lines of $1\frac{1}{8}''$ letters $\frac{3}{8}''$ apart. Make Old Roman alphabet in alphabetical order.

25. Lay out five lines $\frac{1}{2}''$ high $\frac{3}{8}''$ apart. Make Modern Roman alphabet and numerals.

26. Lay out six lines $\frac{3}{8}''$ high $\frac{3}{8}''$ apart. Make Italic and Stump letters and numerals.

CHAPTER VI

Orthographic Projection

The previous chapters have been preparatory to the real subject of engineering drawing as a language. In Chapter I was pointed out the difference between the representation of an object by the artist to convey certain impressions or emotions, and the representation by the engineer to convey information.

If an ordinary object be looked at from some particular station point, one may usually get a good idea of its shape, because (1) generally more than one side is seen, (2) the light and shadow on it tell something of its configuration, (3) looked at with both eyes there is a stereoscopic effect to aid in judging dimensions. In

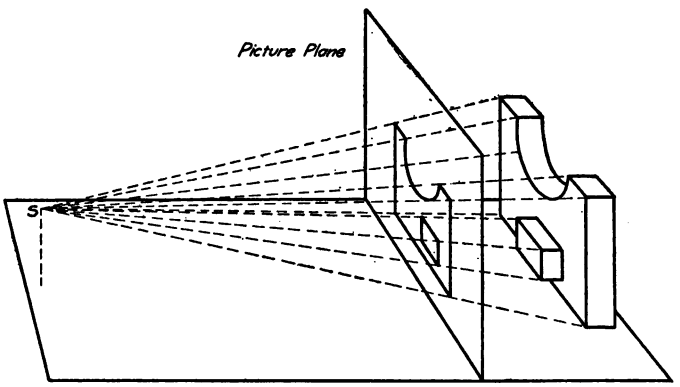

Fig. 141.—Perspective projection.

technical drawing the third point is never considered, but the object is drawn as if seen with one eye; and only in special cases is the effect of light and shadow rendered. In general we have to do with outline alone.

If a transparent plane be imagined as set up between an object and the station point *S* of the observer's eye, Fig. 141, the intersection with this plane, of the cone of rays formed by lines from the eye to all points of the object, will give a picture of the object, which will be practically the same as the picture formed on the

retina of the eye by the intersection of the other end (nappe) of the cone.

Drawing made on this principle is known as *perspective drawing* and is the basis of all artist's work. In a technical way it is used chiefly by architects in making preliminary sketches for their own use in studying problems in design, and for showing their clients the finished appearance of a proposed building. It is entirely unsuited for working drawings, as it shows the object as it appears and not as it really is. The problem in engineering drawing is to represent the exact shape of the object in its three dimensions, length, breadth, and thickness, on the paper, which has only two dimensions. To do this the system of drawing known as *orthographic projection* has been devised.[1]

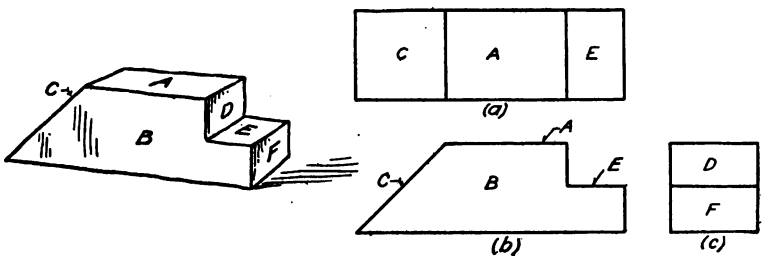

FIG. 142.—A block and its three views.

Practically, this means that the object is drawn in different "views," one as it would appear as if looked at from the top, another as if looked at from straight in front, and if necessary another as seen from the side or end. Thus the shape of a block such as Fig. 142 would be described completely in the views *a*, *b* and *c*.

Explaining more accurately *orthographic projection is the method of representing the exact form of an object in two or more views on planes generally at right angles to each other, by dropping perpendiculars from the object to the planes.*

If the station point *S*, Fig. 141 be conceived as moved back theoretically to an infinite distance the visual rays would become

[1] The whole subject of graphic representation of solids on reference planes comes under the general name of *descriptive geometry*. That term, however, has by common acceptance been restricted to a somewhat more theoretical treatment of the subject as a branch of mathematics. This book may be considered as an ample preparation for that fansciating subject, with whose aid many difficult problems may be solved graphically.

parallel lines perpendicular to the picture plane, Fig. 143, and their intersections with it would give a picture, or projection, of

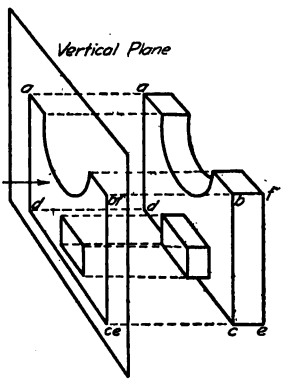

FIG. 143.—Orthographic projection.

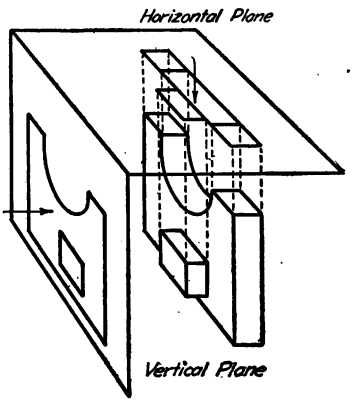

FIG. 144.—The planes of projection.

the same height and width as the object. If now another transparent plane be imagined as placed horizontally above the object and perpendicular to the first plane, as in Fig. 144 the projection on this plane, found by extending perpendiculars to it from the object, will give the appearance of the object as if viewed from directly above it, and will show exactly its width and thickness. These two planes represent the paper, and if the horizontal plane be revolved about its intersection with the vertical plane as in Fig. 145 until it lies in the extension of the same plane the two views will be shown in their correct relationship, and together will give the three dimensions of the object. Similarly any other side may be represented by imagining it to be projected to a plane and the plane afterward revolved away from the object into the plane of the paper.

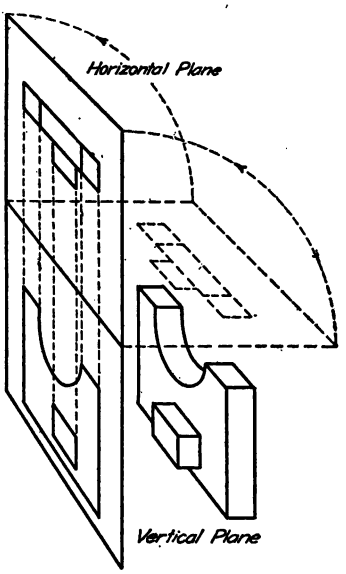

FIG. 145.—The horizontal plane revolved.

Thus an object, Fig. 146 may be thought of as surrounded by a

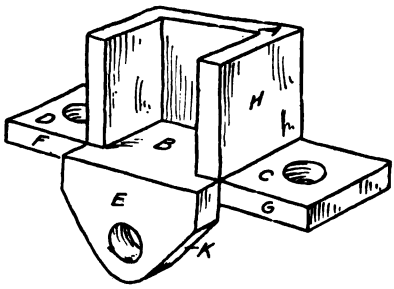

FIG. 146.—The object.

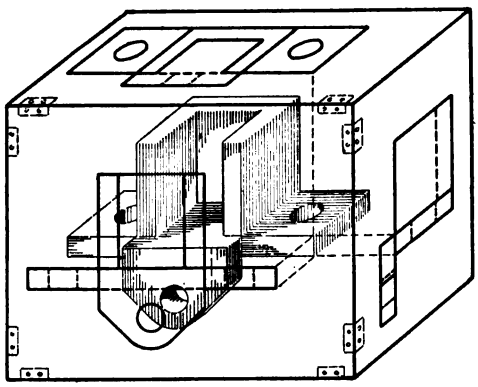

FIG. 147.—The transparent box.

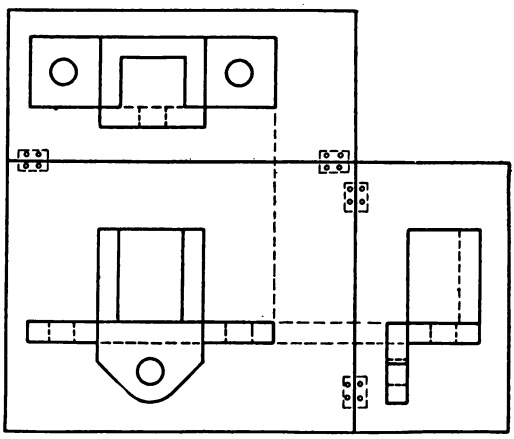

FIG. 148.—The box opened.

box with transparent sides, Fig. 147. The projections on these sides would be practically what would be seen by looking straight at the object from positions directly in front, above and at both sides. These planes of projection when revolved into one plane, as in Fig. 148 show the relative positions of the different pro-

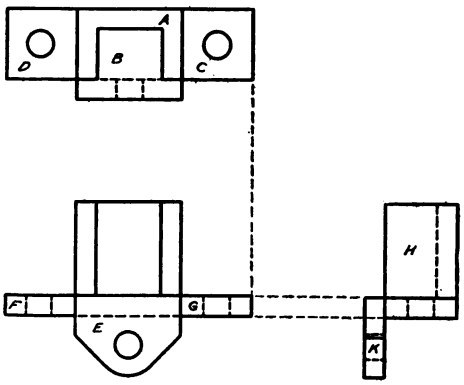

FIG. 149.—The three projections.

jections, Fig. 149. The projection on the front or vertical plane is known as the front view, vertical projection, or front elevation; that on the horizontal plane the top view, horizontal projection, or plan; that on the side or "profile" plane the side view or end view, profile projection, side or end elevation. When necessary

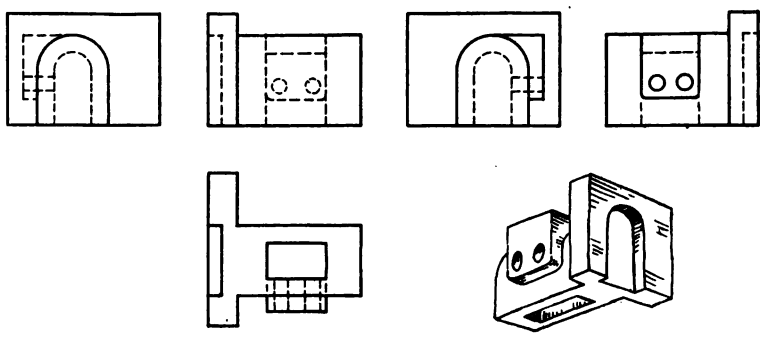

FIG. 150.—Front, sides, back and bottom views.

the bottom view and back view may be made in a similar way by projecting to their planes and opening them up to coincide with the vertical plane, Fig. 150.

Three principles are evident, (1) the top view is directly over

the front view, (2) the side views are in the same horizontal line as the front view, (3) the widths of the side views are exactly the same as the width of the top view. It should be noted particularly that in the side view the front of the object is *facing* the front view.

The following principles should also be noted:

4. A surface parallel to a plane of projection is shown in its true size.

5. A surface perpendicular to a plane of projection is projected as a line.

6. A surface inclined to a plane of projection is foreshortened. *Similarly;*

7. A line parallel to a plane of projection will show in its true length.

NOTE.—The system just explained is known as "third angle projection." If the horizontal and vertical planes are extended beyond their intersection, four dihedral angles will be formed, which are numbered as illustrated in Fig. 151. If the object be placed in the first angle, projected to the planes and the planes opened as before the top view would evidently fall below the front view, and if the profile view were added the view of the left side of the figure would be to the right of the front view. This system, known as "first angle projection," was formerly in universal use, but was generally abandoned in this country twenty-five or thirty years ago and is now almost

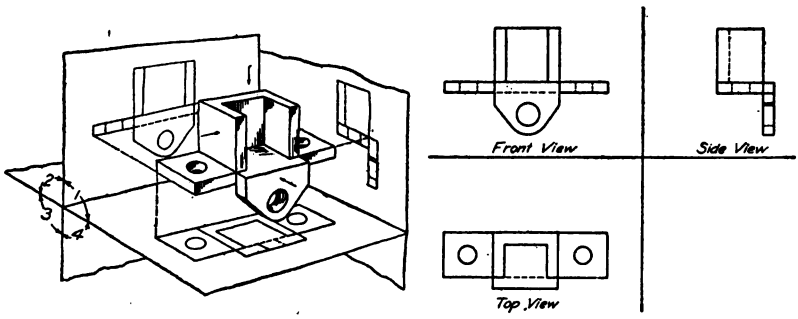

FIG. 151.—First angle projection.

obsolete. The student should understand it, however, as it may be encountered occasionally in old drawings, in some book illustrations and in foreign drawings.

In England some attempt is being made to introduce the more practical third angle projection but nearly all British drawings are either first angle, or with the curious combination of first angle for top and front views and third angle for the side view.

8. A line perpendicular to a plane of projection will be projected as a point.

9. An inclined line will have a projection shorter than its true length.

In practice only as many views are made as are necessary to describe the object, and the "ground lines" or intersections between the reference planes are not represented. In beginning the study of projections it is well to draw freehand the three views of a number of simple objects, developing the ability to write the language, and exercising the imagination in seeing the object itself by reading the three projections.

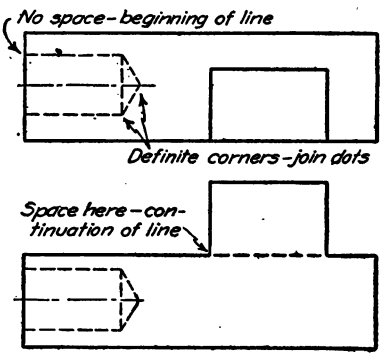

FIG. 152.—Starting dotted lines.

As a general rule to be followed, the view showing the characteristic contour or shape of a piece should be drawn first.

A line on a drawing always indicates an intersection of two surfaces, a visible edge being represented by a full line and an invisible one indicated by a dotted line, *i.e.*, a line made up of short dashes (see Fig. 48). Notice carefully the method of starting dotted lines as shown in Fig. 152.

One cannot read a drawing by looking at one view. Each line on the view indicates a change in direction, but the corresponding

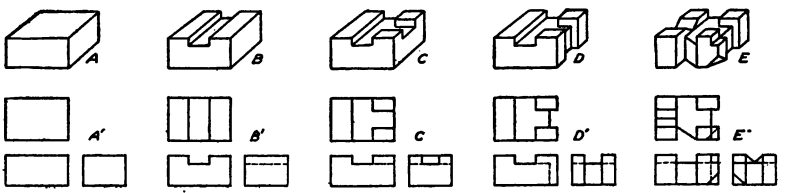

FIG. 153.—A progressive series.

part of another view must be consulted to tell what the change is. For example, a circle on a front view may mean either a hole or a projecting boss. The side view or top view will show immediately which it is.

Fig. 153 shows successive cuts made on a block and the corresponding projections of the block in the different stages. The

effort should be made to visualize the object from these projections until the projection can be read as easily as the picture. A drawing as simple as A' or B' can be read and the mental picture formed, at a glance; one with more lines as E' will require a little

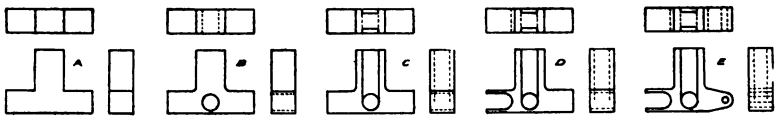

FIG. 154.—A progressive series.

time for study and comparison of the different views. One cannot expect to read a whole drawing at once any more than he would think of reading a whole page of print at a glance.

Fig. 154 is another progressive series illustrating the necessary use of dotted lines to represent invisible parts.

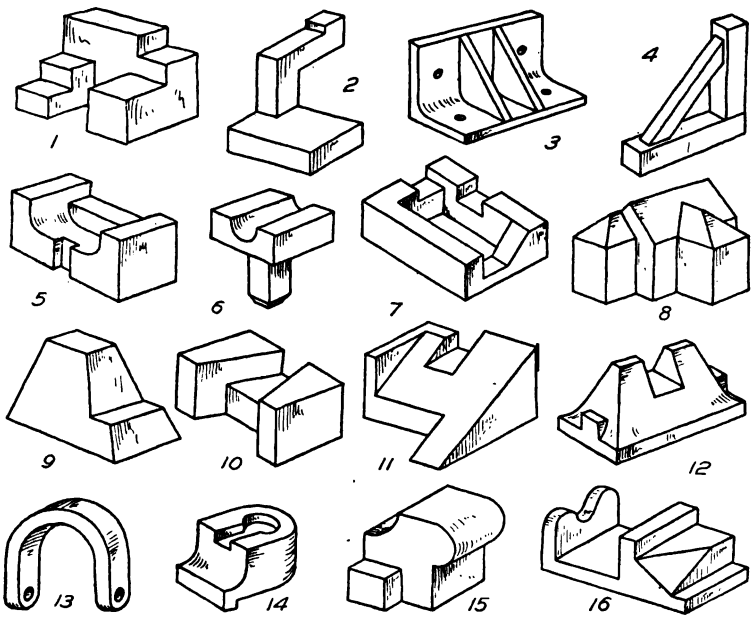

FIG. 155.—Problems to be sketched in orthographic projection.

The objects in Fig. 155 are to be "written" in orthographic projection by sketching their three views. Similar practice may be gained by sketching the projections of any simple models or objects with geometrical outlines such as those illustrated in Fig. 461.

After a study of the methods of pictorial representation (Chapter VIII) this operation should be reversed, and reading practised by making the pictures of objects drawn in orthographic projection.

Auxiliary Views.—Sometimes a view taken from another direction will aid in showing the shape or construction of an object to better advantage than can be done on the three reference planes alone, and often such a view will save making one or more of the regular views. This applies when it is necessary to show some feature on an inclined surface. The true shape of the surface may be shown in what is known as an auxiliary view,

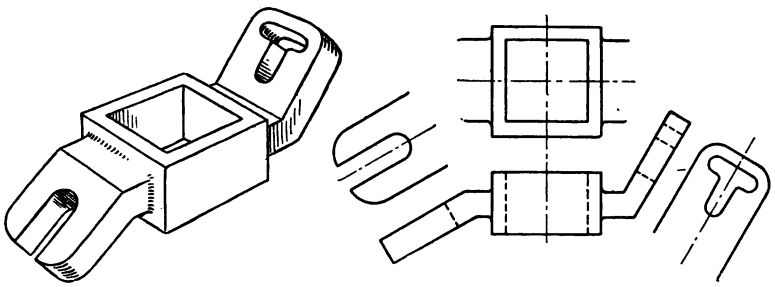

FIG. 156.—Auxiliary projection.

which may be thought of as simply a view looking straight against the surface. In other words it is a projection made on an auxiliary plane parallel to the inclined surface.

Such planes may be set up anywhere perpendicular to one of the planes of projection and revolved parallel to the plane of the paper. In practical work extensive use is made of auxiliary views in showing the true size of sections and of faces of irregular pieces. A part for example like Fig. 156 would be drawn as shown, in this case making both the auxiliary views and the top view as partial views.

The auxiliary projection is usually only a partial view of the piece, and it may be placed in any convenient space on the paper.

Auxiliary views are worked from center or other reference lines and their dimensions are directly obtainable from the other views. Thus to draw the auxiliary view of the truncated prism, Fig. 157, first draw the center line parallel to the cut face, project each point of the front view by drawing a perpendicular to the

center line from it. The width of the auxiliary view will evidently be the same as the width of the top view. Thus for each point measure its distance from the center line on the top view and lay off this distance from the center line on the auxiliary view.

Revolution.—The natural way to place an object would be in the simplest position, with one face or edge parallel to a plane of projection. Sometimes, however, a piece must be shown in a position oblique to one or both planes. In such a case it may be necessary to draw it first in a simpler position, in order to find the dimensions, then to revolve it to the required position.

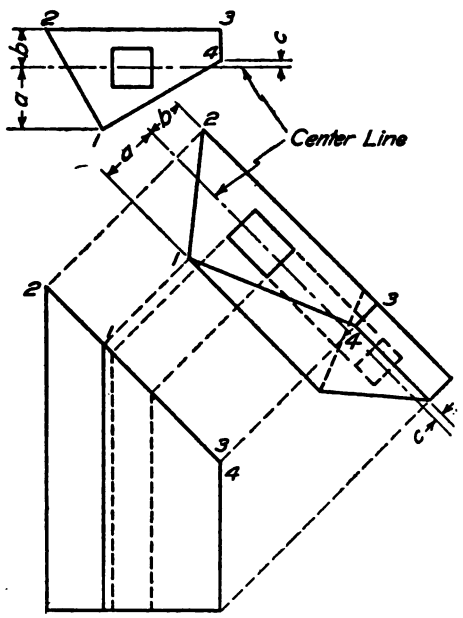

FIG. 157.—Auxiliary projection.

Rule.—If an object be revolved about an axis perpendicular to a plane, (1) its projection on that plane will remain unchanged in size and shape; (2) the dimensions parallel to the axis on the other planes of projection will be unchanged.

Thus if the object at *A* in Fig. 158 be revolved about a vertical axis through 30 degrees the top view will be unchanged in shape but will take a position as in *B*. The height of the object has not been changed in the revolution, so the new front view is found by projecting each point in order across from the original front view to meet a projection line dropped from the new top view. The side view is found by the regular methods of projection, as shown.

To avoid confusion, it is well to letter or number the corresponding points as the views progress.

Similarly, if an object be revolved about a horizontal axis, perpendicular to the *V* plane, Fig. 159, the front view would be unchanged and would be copied in its revolved position. The new top view would be found by projecting across from the origi-

nal top view and up from the new front view. The side view would be found as before.

In a revolution forward or backward about an axis perpendicular to the profile plane the side view is unchanged and the new front view is found by projecting across from the side view, the width being the same as the original front view.

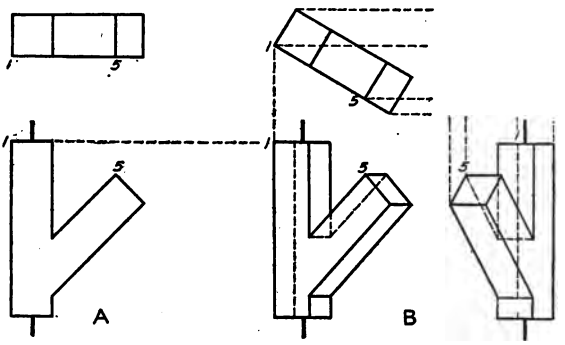

FIG. 158.—Revolution about axis perpendicular to H.

Successive revolutions may be made under the same rules. Fig. 160 is a block revolved first about an axis perpendicular to H through 30 degrees, from this position revolved about an axis perpendicular to V through 45 degrees, and from this

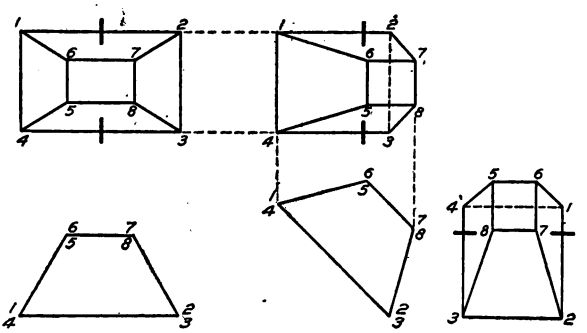

FIG. 159.—Revolution about axis perpendicular to V.

position revolved again about an axis perpendicular to the profile plane through 15 degrees.

Evidently the only difference between the methods of revolutions and auxiliary projections is that in the former the object is moved while in the latter the plane of projection is moved.

Although in practical drawing objects would never be placed in these complicated positions unless unavoidable, problems in

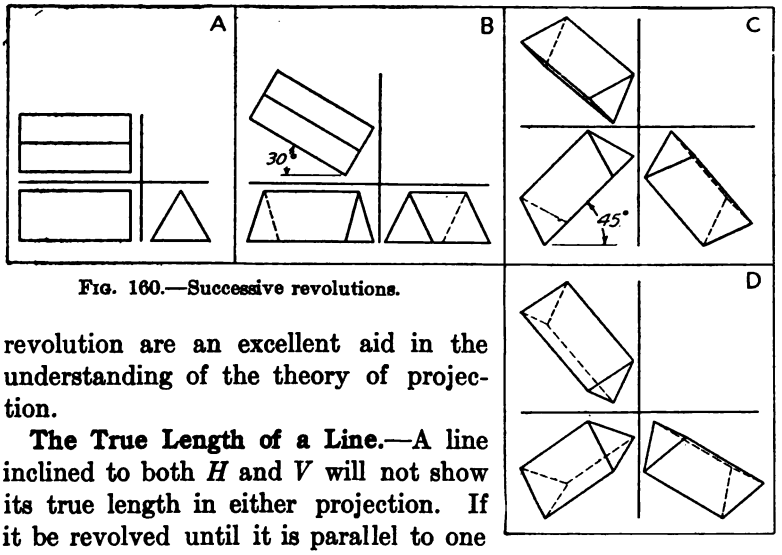

FIG. 160.—Successive revolutions.

revolution are an excellent aid in the understanding of the theory of projection.

The True Length of a Line.—A line inclined to both *H* and *V* will not show its true length in either projection. If it be revolved until it is parallel to one of the planes its projection on that plane will be its true length.

This may be easily understood by assuming the line to be an element on a cone, as in Fig. 161. The slant lines of the front

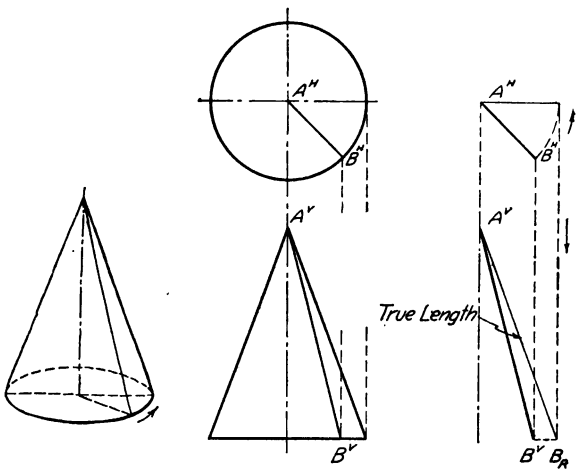

FIG. 161.—True length of a line.

view of a cone show the true lengths of its elements. If the cone be imagined as revolved about its axis each element in

turn will take a position parallel to the plane of projection. Thus if the line AB be assumed to be on a cone as in the figure, its true length would be found by revolving the top view until it is parallel, and projecting the end down to meet a horizontal line corresponding to the base of the cone.

Sectional Views.—Often it is not possible to show clearly the interior construction or arrangement of an object by outside views using dotted lines for the invisible parts. In such case the object is drawn as if a part of it nearest the observer were

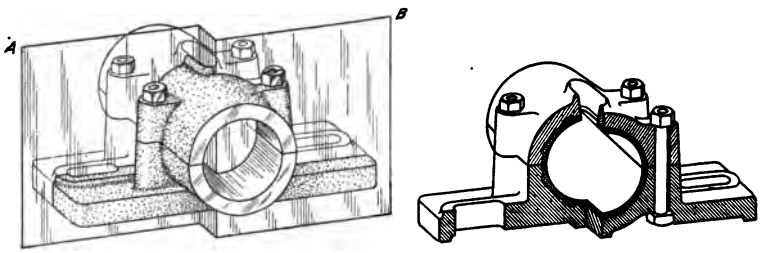

FIG. 162.—Picture of a cutting plane.

cut or broken away and removed. A projection of this kind is known as a sectional view, or section, and the exposed cut surface of the material is indicated by "section lining." It should be understood that in thus removing an obstructing portion so as to show the interior on one view, the same portion is *not* removed from the other views; but on the view to which the cut surface is is perpendicular the edge or "trace" of the cutting plane is indicated by a line. Fig. 162 illustrates pictorially a cutting plane A–B, and the appearance of the bearing after the part in front of the plane has been removed. Fig. 163 is the drawing of the bearing. The top view shows the trace of the cutting plane, and illustrates the fact that the cutting plane need not be continuous but may be taken so as to show the construction to the best advantage. The front view is a typical section. It illustrates the rule that shafts, bolts, nuts, rivets, keys, etc., whose axes occur in the plane of the section are left in full and not sectioned; and the rule that adjacent pieces are sectioned lined in opposite directions.

Section lining is done with a fine line generally at 45 degrees, spaced uniformly to give an even tint, the spacing being governed by the size of the surface, but except in very small drawings not less than $\frac{1}{16}''$. On drawings to be inked or traced the sec-

tion lining is only indicated in pencil and is ruled directly in ink. The spacing is done entirely by the eye. Care should be exercised in setting the pitch by the first two or three lines, and one should glance back at the first lines often in order that the pitch may not gradually change to wider or narrower.

When a figure is symmetrical about an axis it is a common practice to combine two views by showing one-half in section and the other half in full.

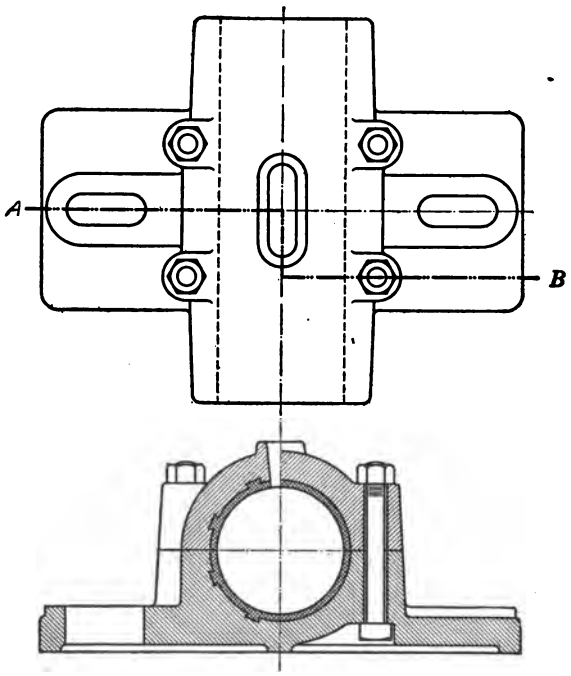

FIG. 163.—Section on *A–B*.

Sections are used very extensively in working drawings, and a decription of the use of broken sections, turned sections, dotted sections, and of the violation of theory will be found in Chapter X.

PROBLEMS

Selections from the following problems are to be made for practice in projection drawing. They are intended to be drawn with instruments, but will give valuable training done freehand, on either plain or coördinate paper.

The two things to be told about an object are its *shape* and its *size*. The former is given by the projections, the latter, which is just as important, is given by the dimensions. These problems may be drawn as introductory working drawings by adding dimension lines and figures. If this is done the section on *Di ensioning* in Chapter X, page 168, must be studied carefully, the dimensions placed according to the rules given, and checked for accuracy.

If drawn to the sizes given the problems will each occupy a space not to exceed $5'' \times 7''$.

Group I. Projections from Pictorial Views

Problems 1 to 8.—Figs. 164 to 171. Draw three views of each piece. Scale full size. The first requirement of a good drawing, after deciding on the requisite views, is to have the views well spaced on the sheet, allowing adequate room for dimensions. A quick preliminary freehand sketch will aid in this study. Then block out the three views together following the general order illustrated in Fig. 350. Work lightly in pencil, and so accurately that the dimensions may be put on by scaling the drawing instead of referring to the figure in the book.

Group II. Views to be Supplied

9, 10, 11, 12.—Figs. 172 to 175. Transfer the given views with the dividers, doubling all dimensions. Draw three complete views of each piece. Check projections carefully.

13, 14, 15, 16.—Figs. 176 to 179. Draw three views as specified.

Group III. Auxiliary Problems

17, 18, 19.—Figs. 180 to 182. Draw views given, and auxiliary view.

20, 21, 22.—Figs. 183 to 185. Draw a vertical projection and other necessary views or part views.

Group IV. Revolutions

(H = horizontal plane, V = vertical plane, P = profile or side plane.)

23. (1) Draw three views of one of the blocks of Fig. 186, in simplest position. (2) Revolve from position (1) about an axis $\perp H$ through 15 degrees. (3) Revolve from position (2) about an axis $\perp V$ through 45 degrees. (4) Revolve from position (1) about an axis $\perp P$ forward through 30 degrees. (5) Revolve from position (2) about an axis $\perp P$ forward through 30 degrees. (6) Revolve from position (3) about an axis $\perp P$ forward through 30 degrees. [(4), (5) and (6) may be placed to advantage under (1), (2) and (3) so that the widths of front and top views may be projected down directly.]

24. Complete top and front views of Fig. 187, and draw side view of box in position as shown using auxiliary view shown at A to obtain projections of lid. Scale $6'' = 1$ ft.

25. Determine what views will represent the piece, Fig. 188, to the best advantage. Submit sketch before drawing. Scale $1\frac{1}{2}'' = 1$ ft.

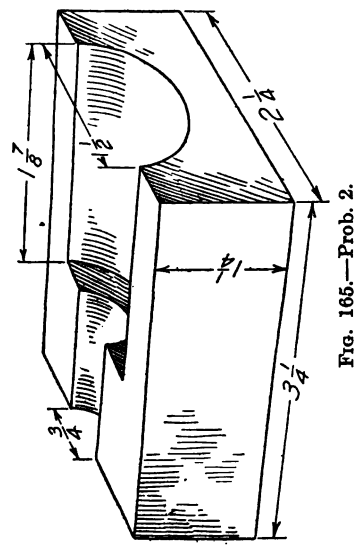

Fig. 165.—Prob. 2.

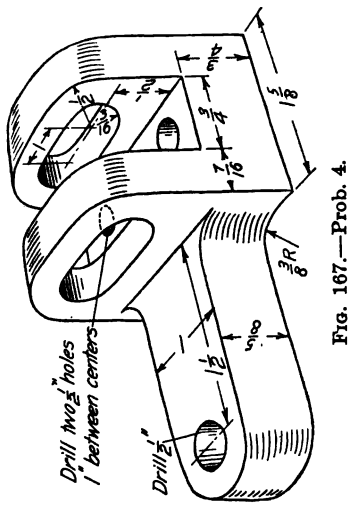

Fig. 167.—Prob. 4.

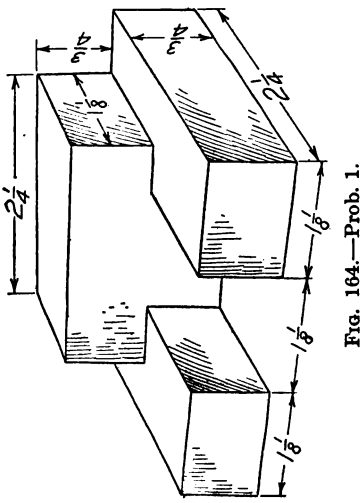

Fig. 164.—Prob. 1.

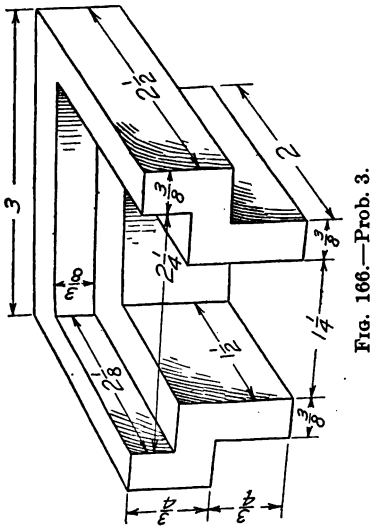

Fig. 166.—Prob. 3.

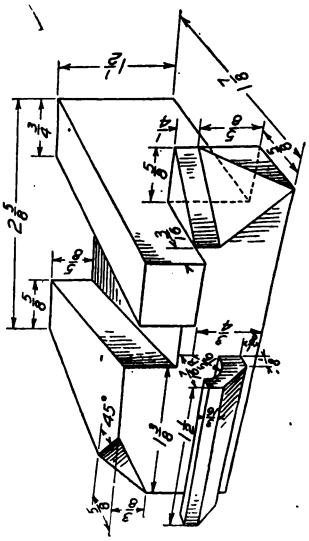

FIG. 169.—Prob. 6.

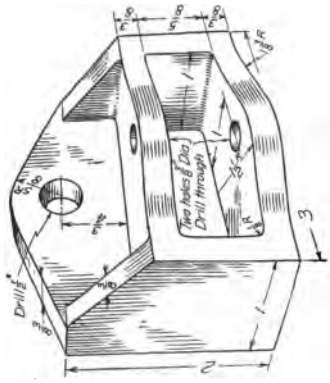

FIG. 171.—Prob. 8.

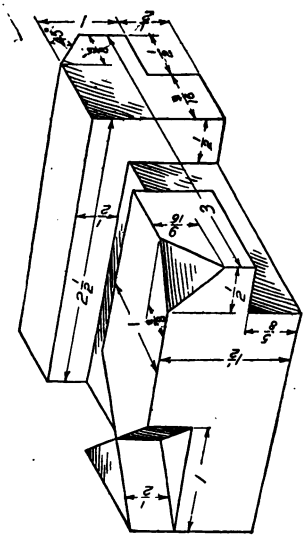

FIG. 168.—Prob. 5.

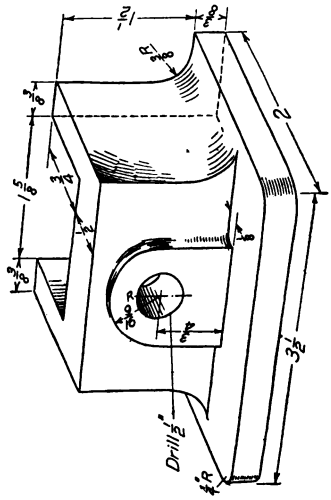

FIG. 170.—Prob. 7.

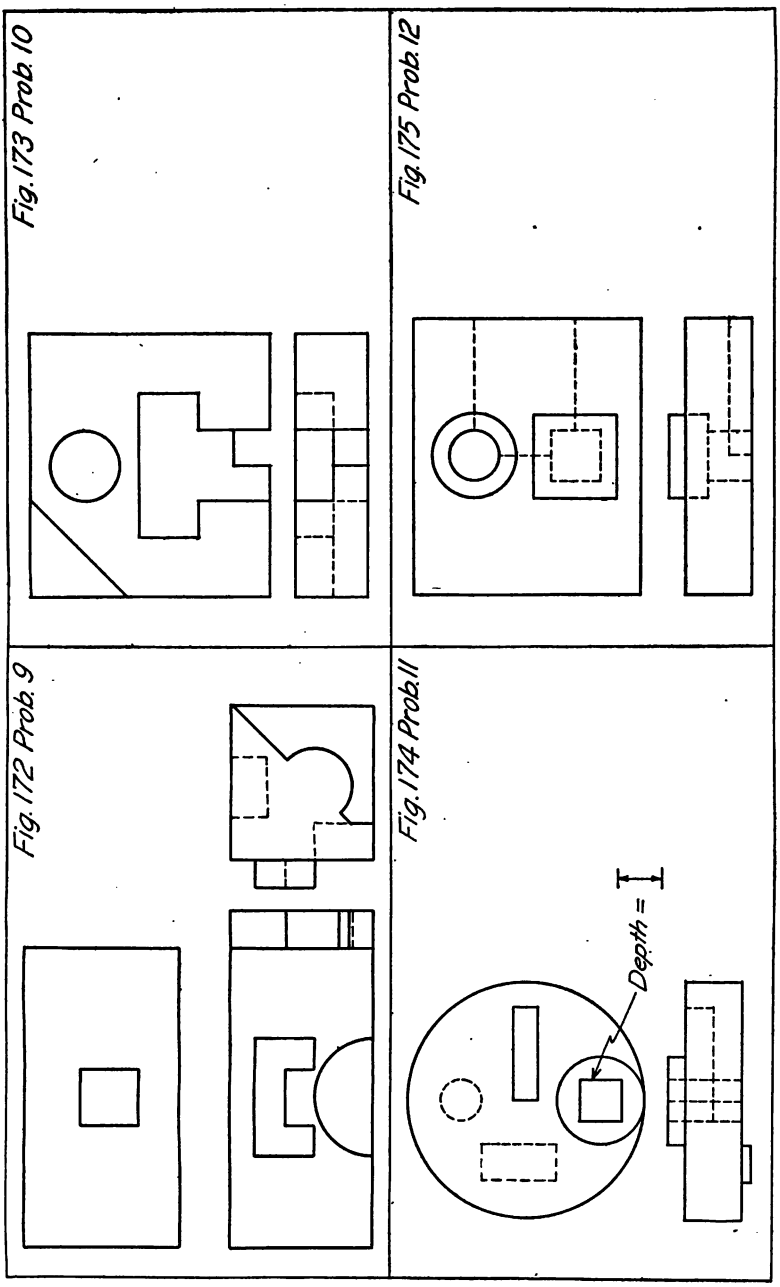
Fig. 173 Prob. 10
Fig. 175 Prob. 12
Fig. 172 Prob. 9
Fig. 174 Prob. 11
Depth =

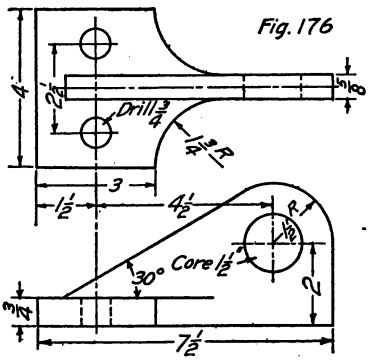

Fig. 176

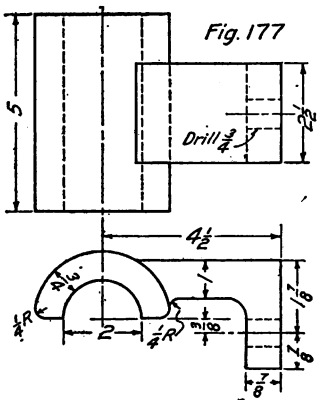

Fig. 177

Fig. 176. Prob. 13
Given: Top and front views.
Req. Top, front and right side views.
Scale 6" = 1'

Fig. 177. Prob. 14
Given: Top and front views.
Req. Top, front and right side views.
Scale 6" = 1'

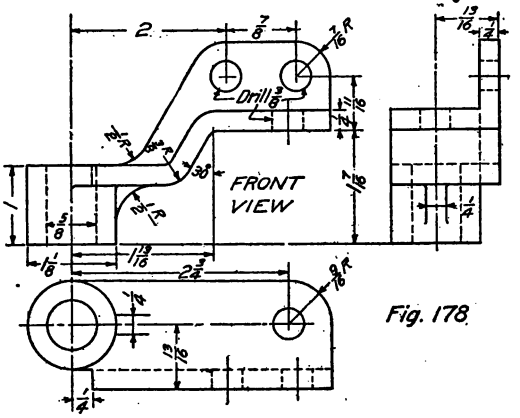

Fig. 178

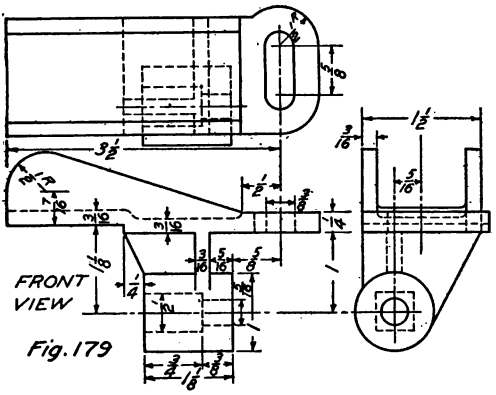

Fig. 179

Fig. 178. Prob. 15
Given: Front, right side and bottom views.
Req. Front, top and left side views.

Fig 179. Prob. 16
Given: Top, front and right side views.
Req. Front, bottom and left side views.

FIGS. 176 TO 179.

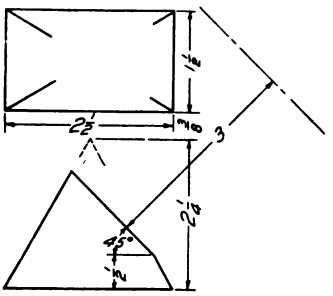

FIG. 180.—Prob. 17.

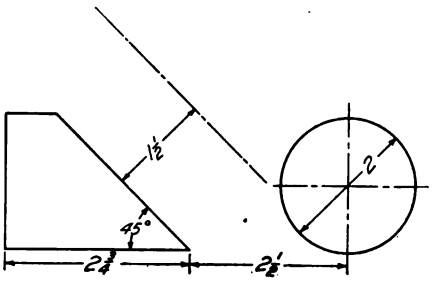

FIG. 181.—Prob. 18.

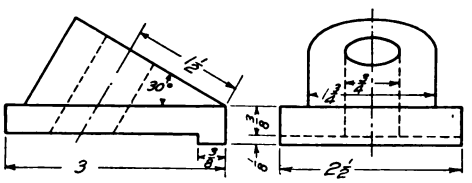

FIG. 182.—Prob 19.

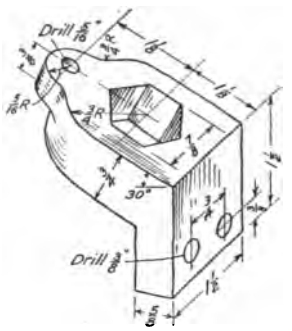

FIG. 183.—Prob. 20.

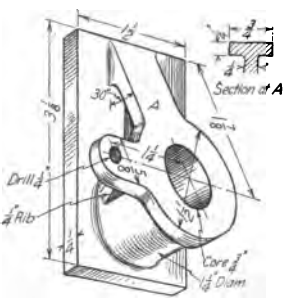

FIG. 184.—Prob. 21.

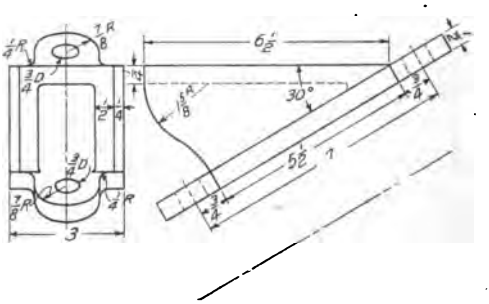

FIG. 185.—Prob. 22.

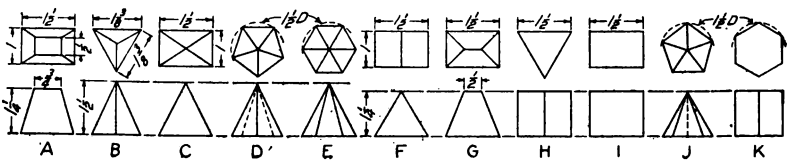

FIG. 186.—Prob. 23.

Group V. True Lengths

26. Find true length of the body diagonal of a 2″ cube.

27. Find true length of an edge of one of the pyramids of Fig. 186.

28. Find true length of any element, as AB, of oblique cone, Fig. 189. Scale 6″ = 1 ft.

29. Find true length of line AB on brace, Fig. 190, and make a detail drawing of the brace. Scale ¾″ = 1 ft.

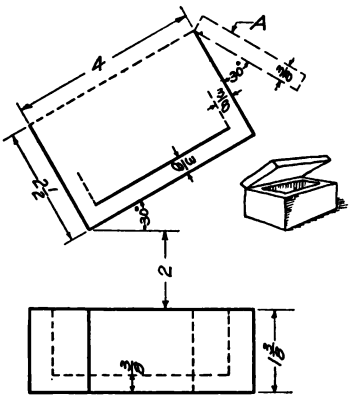

FIG. 187.—Prob. 24.

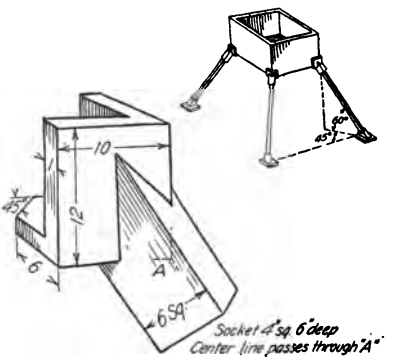

FIG. 188.—Prob. 25.

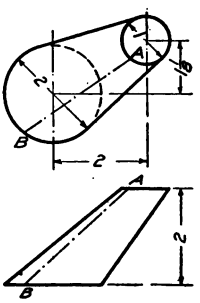

FIG. 189.—Prob. 28.

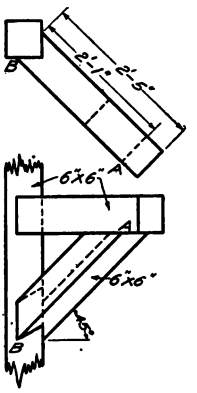

FIG. 190.—Prob. 29.

Group VI. Sectional Views

30. Fig. 191. Draw in section, full size.

31. Fig. 192. Draw in section, full size.

32. Fig. 193. Draw end view in section, and front view with lower half in section. Scale 6″ = 1 ft.

33. Fig. 194. Draw three views, front view in section. Scale 6″ = 1 ft.

34. Fig. 195. Draw three views, front view in section. Scale 3″ = 1 ft.

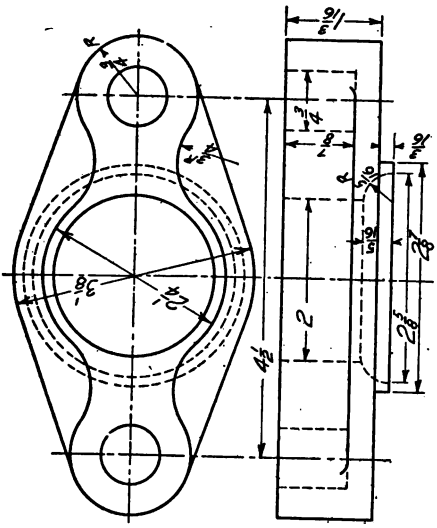

FIG. 192.—Prob. 31.

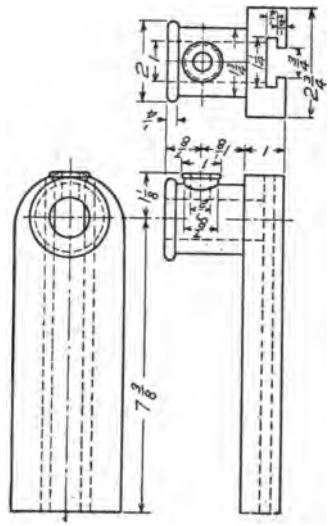

FIG. 194.—Prob. 33.

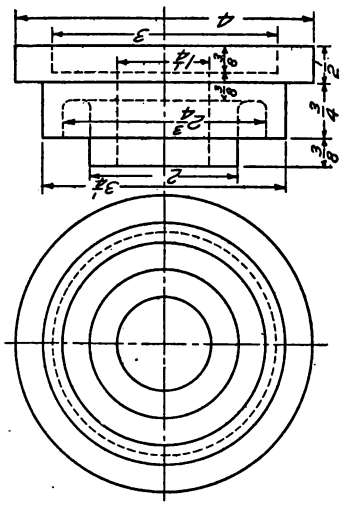

FIG. 191.—Prob. 30.

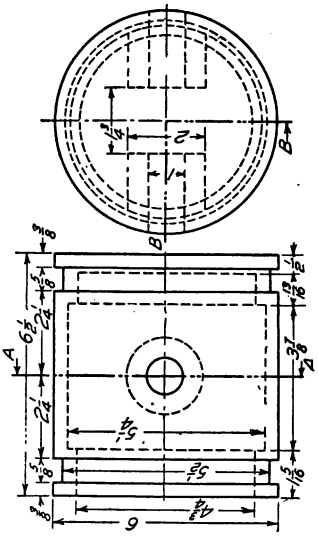

FIG. 193.—Prob. 32.

35. Fig. 196. Draw three views, front and end views in section, full size.

36. Fig. 197. Draw complete top and front views, front view in section. Find tangent points accurately.

37. Fig. 198. Draw three views, front view in section, full size.

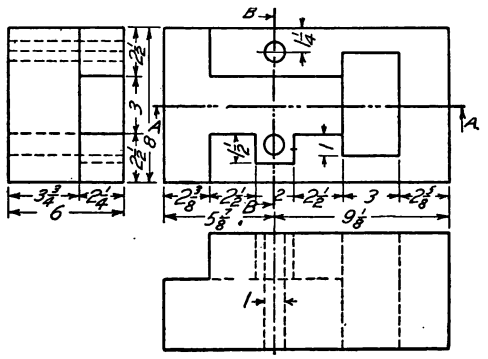

FIG. 195.—Prob. 34.

Group VII. Drawing from Description

38. Draw three views of a pentagonal prism, axis 1″ long and perpendicular to *H*, circumscribing circle of base 1⅛″ diam., surmounted by a cylindrical abacus (cap) 1½″ diam., ½″ thick.

39. Draw three views of a triangular card each edge of which is 1¾″ long. One edge is perpendicular to *P*, and the card makes an angle of 30 degrees with *H*.

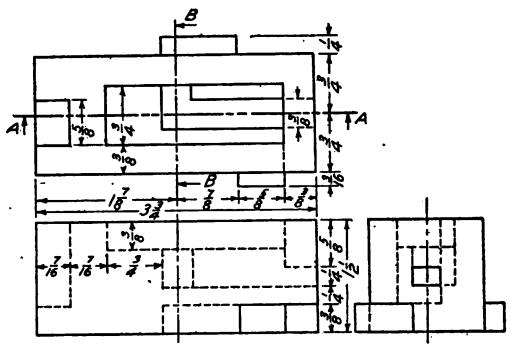

FIG. 196.—Prob. 35.

40. Draw three views of a circular card 1¾″ diam., inclined 30° to *H*, and perpendicular to *V*. (Find 8 points on the curve.)

41. Draw three views of a cylinder 1″ diam., 2″ long, with hexagonal hole, ¾″ long diam., through it. Axis of cylinder parallel to *H* and inclined 30 degrees to *V*.

42. Draw top and front views of a hexagonal plinth whose *faces* are ⅝″ square and two of which are parallel to *H*, pierced by a square prism 2¾″ long, base ½″ square The axes coincide, are parallel to *H*, and make an angle of 30 degrees with *V*. The middle point of the axis of the prism is at the center of the plinth.

43. Draw the two projections of a line 2″ long, making an angle of 30 degrees with *V*, and whose *V* projection makes 45 degrees with *G.L.*, the line sloping downward and backward to the left.

44. Draw three views of a square pyramid whose faces are isosceles triangles 1¼″ base and 2″ alt., lying with one face horizontal, the *H* projection of its axis at an angle of 30 degrees with *G.L.*

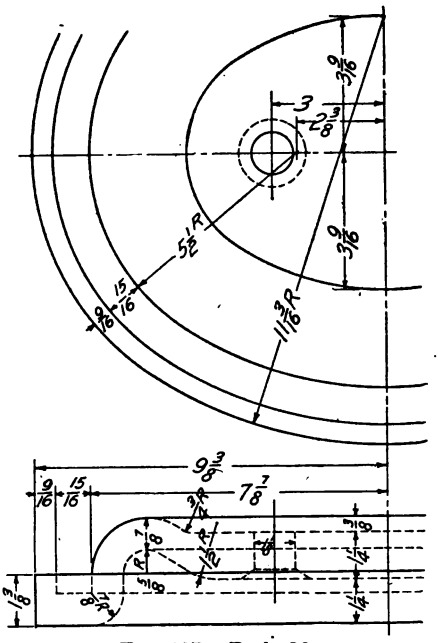

FIG. 197.—Prob. 36.

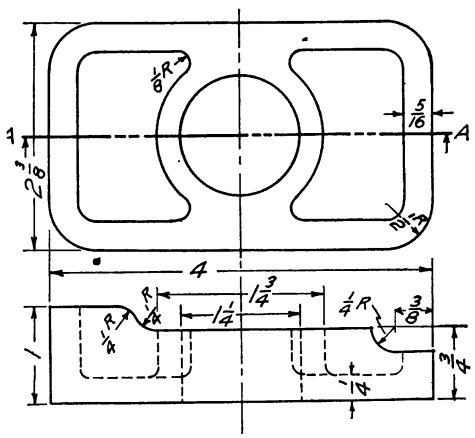

FIG. 198.—Prob. 37.

45. Draw three views of a triangular pyramid formed of four equilateral triangles whose sides are 1¾″. The base makes an angle of 45 degrees with *H*, and one of the edges of the base is perpendicular to *V*.

46. Draw top and front views of a rectangular prism, base ⅝″ × 1¼″ whose body diagonal is 1¾″ long. Find projection of prism on an auxiliary plane perpendicular to the body diagonal.

CHAPTER VII

Developed Surfaces and Intersections[1]

Surfaces.—A surface may be considered as generated by the motion of a line. Surfaces may thus be divided into two general classes, (1) those which can be generated by a moving straight line, (2) those which can be generated only by a moving curved line. The first are called *ruled surfaces*, the second, *double curved surfaces*. Any position of the moving line is called an *element*.

Ruled surfaces may be divided into (*a*) *planes*, (*b*) *single curved surfaces*, (*c*) *warped surfaces*.

A *plane* may be generated by a straight line moving so as to touch two other intersecting or parallel straight lines.

Single curved surfaces have their elements either parallel or intersecting. These are the cylinder and the cone; and a third surface, which we shall not consider, known as the convolute, in which the consecutive elements intersect two and two.

Warped surfaces have no two consecutive elements either parallel or intersecting. There is a great variety of warped surfaces. The surface of a screw thread and of the pilot of a locomotive are two examples.

Double curved surfaces are generated by a curved line moving according to some law. The commonest forms are *surfaces of revolution*, made by the revolution of a curve about an axis in the same plane, as the sphere, torus or ring, ellipsoid, paraboloid, hyperboloid, etc.

Development.—In some kinds of construction full-sized patterns of different faces, or of the entire surface of an object are required; as for example in stone cutting, a templet or pattern giving the shape of an irregular face, or in sheet metal work, a pattern to which a sheet may be cut that when rolled, folded, or formed will make the object.

[1] The full theoretical discussion of surfaces, their classification, properties, intersections, and development may be found in any good descriptive geometry.

The operation of laying out the complete surface on one plane is called the *development* of the surface.

Surfaces about which a thin sheet of flexible material (as paper or tin) could be wrapped smoothly are said to be developable; these would include figures made up of planes and single curved surfaces only. Warped and double curved surfaces are non-developable, and when patterns are required for their construction they can be made only by some method of approximation, which assisted by the pliability of the material will give the required form. Thus, while a ball cannot be wrapped smoothly a two-piece pattern developed approximately and cut from leather may be stretched and sewed on in a smooth cover, or a flat disc of metal may be die-stamped, formed, or spun to a hemispherical or other required shape.

We have learned the method of finding the true size of a plane surface by projecting it on an auxiliary plane. If the true size of all the faces of an object made of planes be found and joined in order, at their common edges, the result will be the developed surface. This may be done usually to the best advantage by finding the true lengths of the edges.

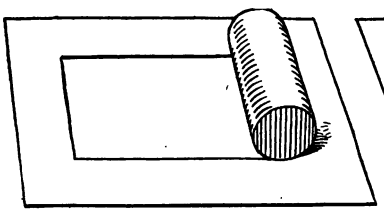

FIG. 199.—The cylinder developed.

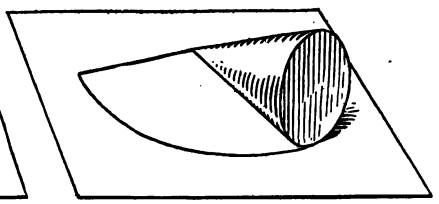

FIG. 200.—The cone developed.

The development of a right cylinder would evidently be a rectangle whose width would be the altitude, and length the rectified circumference, Fig. 199; and the development of a right cone with circular base would be a sector with a radius equal to the slant height, and arc equal in length to the circumference of the base, Fig. 200.

In the laying out of real sheet metal problems an allowance must be made for seams and lap, and in heavy sheets for the thickness and for the crowding of the metal; there is also the consideration of the commercial sizes of material, and of economy in cutting, in all of which some practical shop knowledge is necessary. This chapter will be confined to the principles alone.

In the development of any object its projections must first be made, drawing only such views or parts of views as are necessary to give the lengths of elements and true size of cut surfaces.

To Develop the Hexagonal Prism.—Fig. 201. Since the base is perpendicular to the axis it will roll out into the straight line *AB*. This line is called by sheet metal workers the "stretchout." Lay off on *AB* the length of the perimeter of the base, and at points 1, 2, 3, etc., erect perpendiculars, called "measuring lines," representing the edges. Measure on each of these its length as

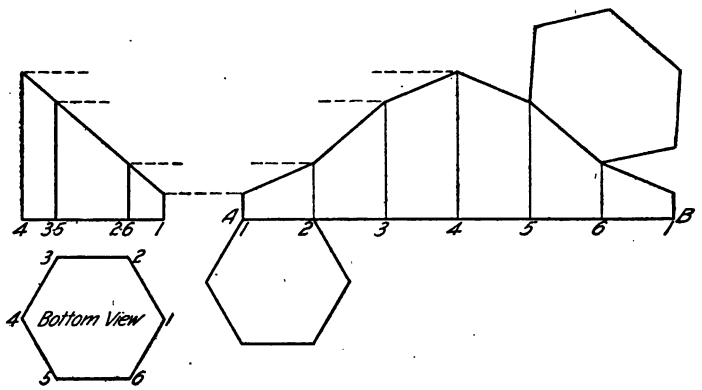

FIG. 201.—Development of hexagonal prism.

given on the front view, and connect the points. For the development of the entire surface in one piece attach the true size of the upper face and the bottom in their proper relation on common lines. It is customary to make the seam on the shortest edge.

To Develop the Right Cylinder.—Fig. 202. In rolling the cylinder out on a tangent plane, the base, being perpendicular to the axis, will develop into a straight line. Divide the base, here shown as a bottom view, into a number of equal parts, representing elements. Project these elements up to the front view. Draw the stretchout and measuring lines as before. Transfer the lengths of the elements in order, either by projection or with dividers, and join the points by a smooth curve. Sketch the curve very lightly freehand before fitting the curved ruler to it. This might be one-half of a two-piece elbow. Three-piece, four-piece, or five-piece elbows may be drawn similarly, as illustrated in Fig. 203. As the base is symmetrical, one-half only

need be drawn. In these cases the intermediate pieces as *B*, *C* and *D* are developed on a stretchout line formed by laying off the perimeter of a section, called a "right section" obtained by a plane perpendicular to the elements. Taking this plane

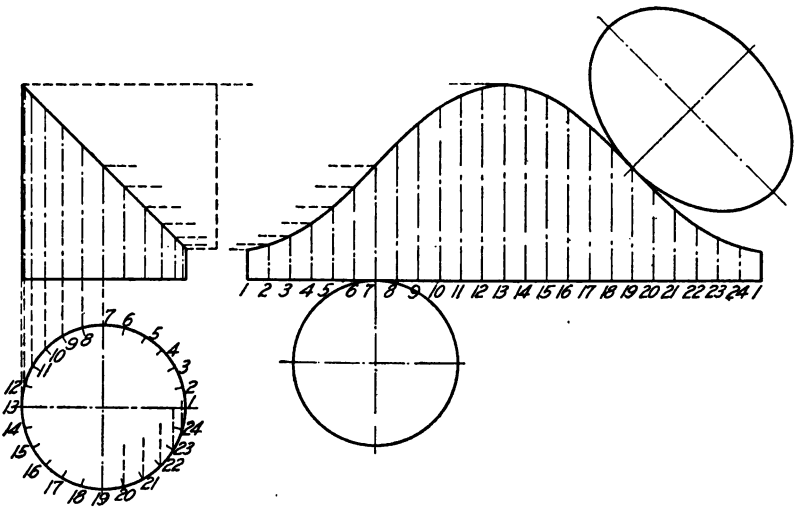

FIG. 202.—Development of right cylinder.

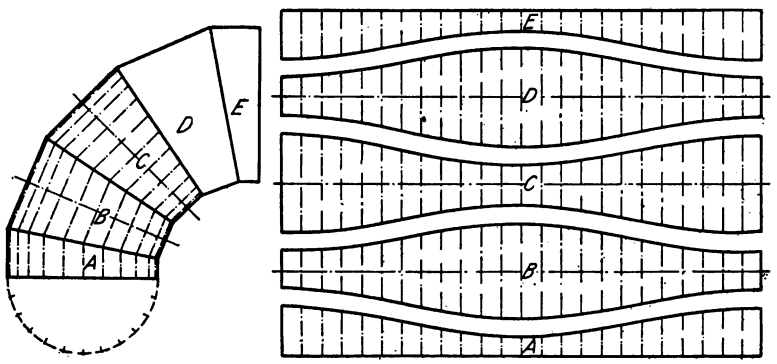

FIG. 203.—Development of five piece elbow.

through the middle of the piece the stretchout line becomes the center line of the development.

Evidently any elbow could be cut from a single sheet without waste if the seams were made alternately on the long and short sides.

The octagonal dome, Fig. 204 illustrates an application of the development of cylinders. Each piece is a portion of a cylinder. The elements are parallel to the base of the dome and show in their true lengths in the top view. The true length of the stretch-out line shows in the front view at O^vA^v. By considering O^hA^h as the edge of a right section the problem is identical with the preceding problem.

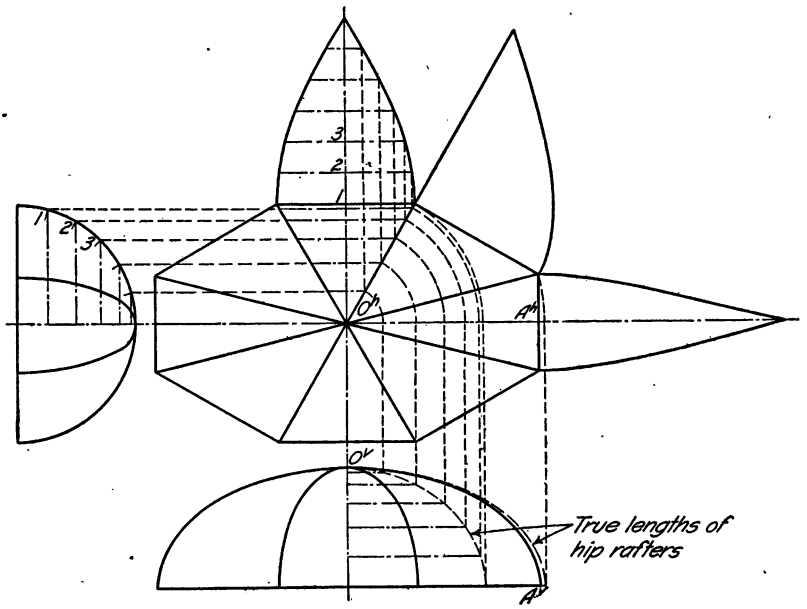

FIG. 204.—Development of octagonal dome.

The true shape of a hip rafter is found by revolving it until parallel to the vertical plane, in the same manner as finding the true length of any line, taking a sufficient number of points on it to get a smooth curve.

To Develop the Hexagonal Pyramid.—Fig. 205. Since this is a right pyramid the edges are all of equal length. The edges OA and OD are parallel to the vertical plane and consequently show in their true length on the front view. With a center O_1 taken at any convenient place, and a radius O^vA^v draw an arc. On it step off the perimeter of the base and connect these points successively with each other and with the vertex O_1.

The line of intersection of the cutting plane is developed by laying off the true length of the intercept of each edge on the cor-

responding line of the development. The true length of these intercepts is found by revolving them about the axis of the pyramid until they coincide with O^vA^v as explained on page 84. The path of any point, as K^v, will be projected on the front view as a horizontal line. For the development of the entire

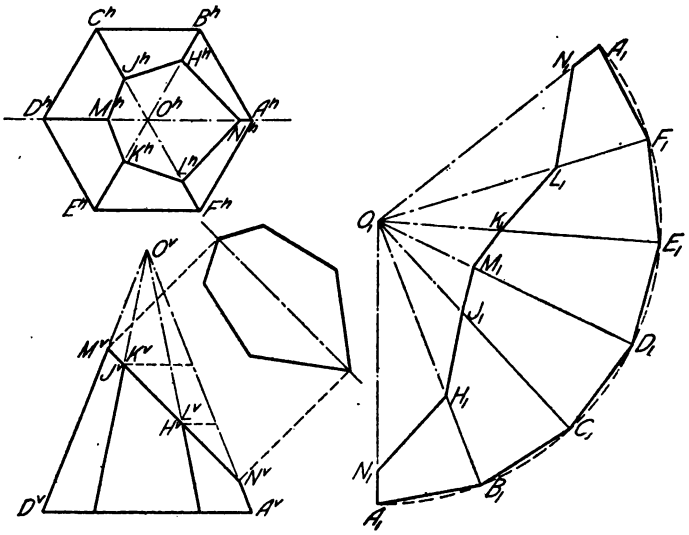

FIG. 205.—Development of hexagonal pyramid.

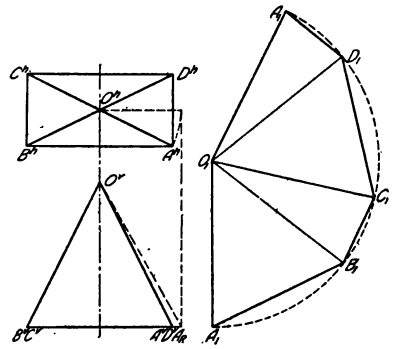

FIG. 206.—Development of rectangular pyramid.

surface of the truncated pyramid attach the base, also find the true size of the cut face and attach it on a common line.

The rectangular pyramid, Fig. 206, is developed in a similar way, but as the edge OA is not parallel to the plane of projection it must be revolved to O^vA_R to obtain its true length.

To Develop the Truncated Right Cone.—Fig. 207. Divide the top view of the base into a convenient number of equal parts, project these points on the front view and draw the elements through them. With a radius equal to the slant height of the cone, found from the contour element O^vA^v which shows the true length of all the elements, draw an arc, and lay off on it the divisions of the base, obtained from the top view. Connect these points with O_1 giving the developed positions of the elements. Find the true length of each element from vertex to cutting

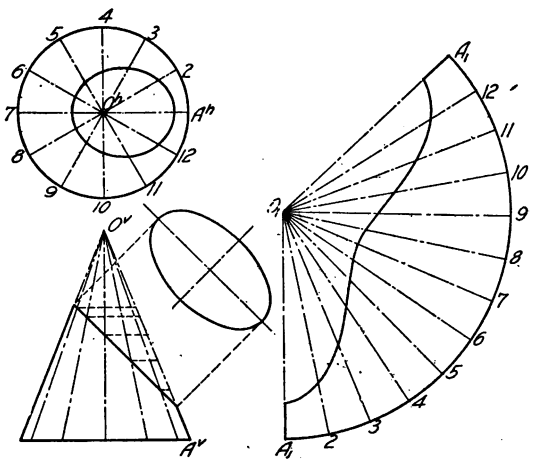

FIG. 207.—Development of right cone.

plane by revolving it to coincide with the contour element O^vA^v, and mark the distance on the developed position. Draw a smooth curve through these points.

Triangulation.—Non-developable surfaces are developed approximately by assuming them to be made up of narrow sections of developable surfaces. The commonest and best method for approximate development is by triangulation, *i.e.*, assuming the surface to be made up of a large number of triangular strips, or plane triangles with very short bases. This is used for all warped surfaces, and also for oblique cones, which although single curved surfaces and capable of true theoretical development can be done much more easily and accurately by triangulation.

The principle is extremely simple. It consists merely in dividing the surface into triangles, finding the true lengths of

the sides of each, and, constructing them one at a time, joining these triangles on their common sides.

To Develop an Oblique Cone.—Fig. 208. An oblique cone differs from a right cone in that the elements are all of different lengths. The development of the right cone was practically made up of a number of equal triangles meeting at the vertex, whose sides were elements and bases the chords of short arcs of the base of the cone. In the oblique cone each triangle must be found separately.

Divide the base into a number of equal parts 1, 2, 3, etc. (as the plan is symmetrical about the axis O^hC^h one-half only need be

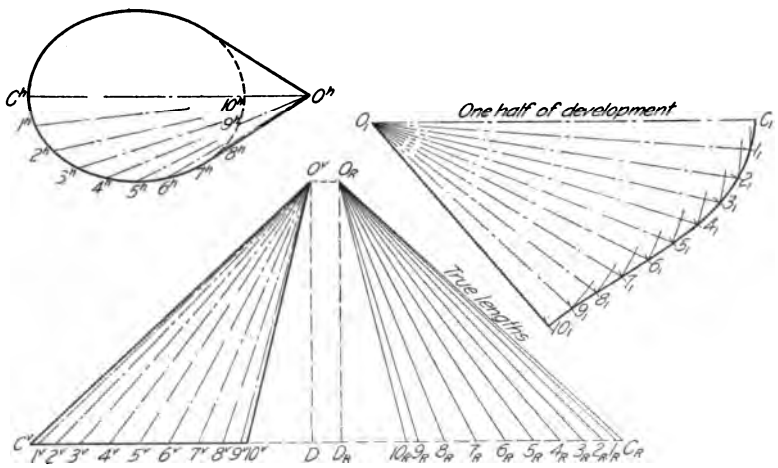

FIG. 208.—Development of oblique cone by triangulation.

constructed). If the seam is to be on the short side the line OC will be the center line of the development and may be drawn directly at O_1C_1 as its true length is given at O^vC^v. Find the true lengths of the elements O_1, O_2, etc. by revolving them until parallel to V. This can be done by the usual method, but may be done without confusing the drawing by constructing an auxiliary figure as shown. The true length of any element is the hypotenuse of a right triangle whose altitude is the altitude of the cone and whose base is the length of the H projection. Thus to find the true length of $O1$ lay off O^h1^h at D_R1_R and connect O_R1_R.

With O_1 as center and radius O_R1_R draw an arc on each side of O_1C_1. With C_1 as center and radius C^h1^h intersect these arcs

at 1_1 then O_11_1 will be the developed position of the element $O1$. With 1_1 as center and arc 1^h2^h intersect O_12_1 and continue the operation.

Fig. 209 is an oblique cone connecting two parallel pipes of different diameters. This is developed in a manner similar to Fig.

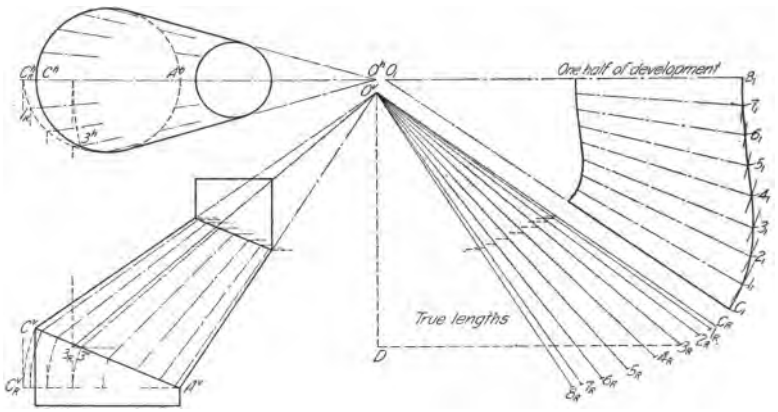

FIG. 209.—Development of oblique cone by triangulation.

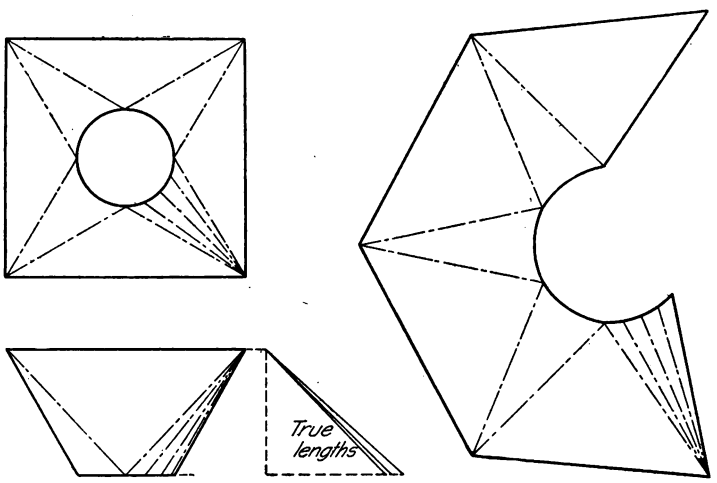

FIG. 210.—Transition piece.

208. The contour elements are extended to find the apex of the cone and the true lengths of the elements found as shown, measuring the lengths of the top views from the line O^vD^v on horizontal lines projected across from the base on the front

view. As the base of the cone is not shown in its true size on the top view the true lengths of the short sides of the triangles must be found by revolving the base parallel to H. With A^v as a center revolve each point on the front view of the base down to a horizontal line, C^v falling at $C_R{}^v$. Project these points up to meet horizontal lines drawn through corresponding points on the top view. From this the distances $C_R{}^h 1_R$, etc., may be found.

Transition Pieces.—Transition pieces are used to connect pipes or openings of different shapes of cross-section. Fig. 210, for connecting a round pipe and a square pipe on the same axis,

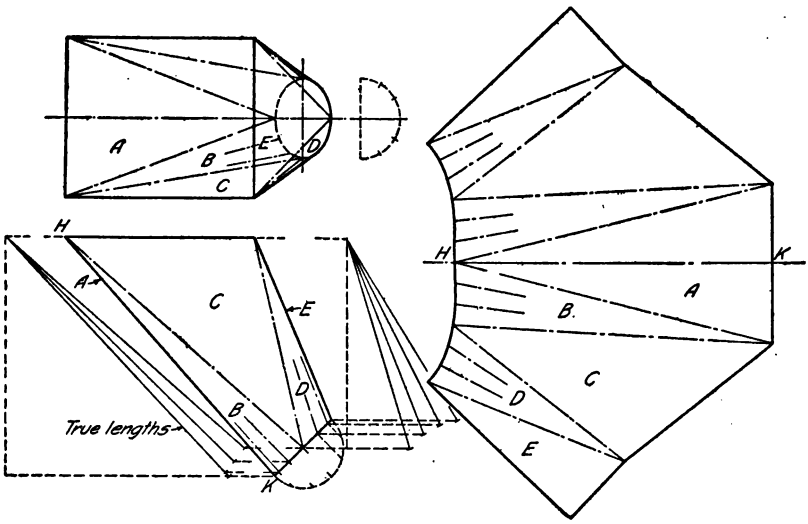

FIG. 211.—Transition piece.

is typical. These are always developed by triangulation. The piece shown in Fig. 210 is evidently made up of four isosceles triangles whose bases are the sides of the square, and four parts of oblique cones. As the top view is symmetrical about both center lines, one-fourth only need be divided. The construction is illustrated clearly in the figure.

Fig. 211 is another transition piece, from rectangular to round. By using an auxiliary view of one-half the round opening the divisions for the bases of the oblique cones can be found. The true lengths of the elements are obtained as in Fig. 209.

To Develop a Sphere.—The sphere may be taken as typical of double curved surfaces, which can only be developed approxi-

mately. It may be cut into a number of equal meridian sections, as in Fig. 212, and these considered to be sections of cylinders. One of these sections developed as the cylinder in Fig. 204 will give a pattern for the others.

Another method is to cut the sphere in horizontal sections, each of which may be taken as the frustum of a cone whose apex is at the intersection of the extended chords, Fig. 213.

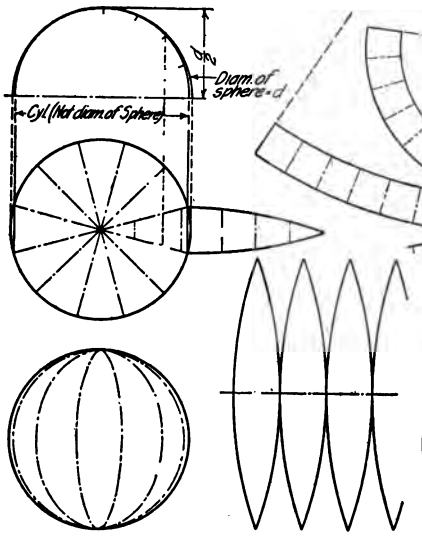

FIG. 212.—Sphere, gore method.

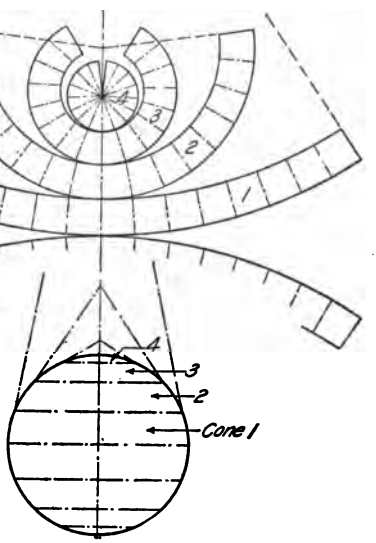

FIG. 213.—Sphere, zone method.

THE INTERSECTION OF SURFACES.—When two surfaces intersect, the line of intersection, which is a line common to both, may be thought of as a line in which all the elements of one surface pierce the other. Practically every line on a drawing is a line of intersection, generally the intersection of two planes, or a cylinder cut by a plane, giving a circle. The term "intersection of surfaces" refers however to the more complicated lines occurring when geometrical surfaces such as cylinders, cones, prisms, etc., intersect each other.

Two reasons make it necessary for the draftsman to be familiar with the methods of finding the intersections of surfaces; first, intersections are constantly occurring on working drawings, and must be represented; second, in sheet metal combinations the intersections must be found before the piece can be developed.

In the first case it is only necessary to find a few critical points, and "guess in" the curve; in the second case enough points must be determined to enable the development to be laid out accurately.

Any practical problem resolves itself into some combination of the geometrical type forms. In general the method of finding the line of intersection of any two surfaces is to pass a series of planes through them in such a way as to cut from each the simplest lines. The intersection of the lines cut from each surface by a plane will give one or more points on the line of intersection.

A study of the following typical examples will explain the method of working this class of problems.

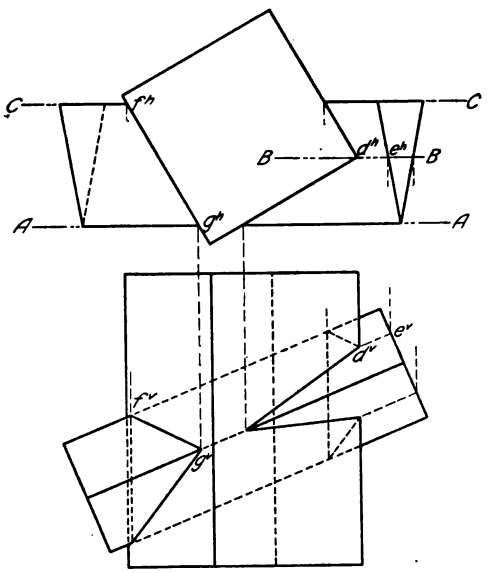

FIG. 214.—Intersection of two prisms.

To Find the Intersection of Two Prisms.—Fig. 214. Since the triangular prism would pass entirely through the square prism there are two closed "curves" of intersection. A plane *A–A* parallel to the vertical plane through the front edge of the triangular prism cuts two elements from the square prism. The front view shows where these elements cross the edge of the triangular prism thus locating one point on each curve. The plane *C–C* will contain the other two edges of the triangular

prism and will give two more points on each curve. As on the left side only one face of the square prism is penetrated, the curve would be a triangle, two sides of which are visible and one invisible. On the right side two faces are penetrated. The plane *B–B* is thus passed through the corner, the two elements cut from the triangular prism projected to the front view, where they intersect the corner as shown.

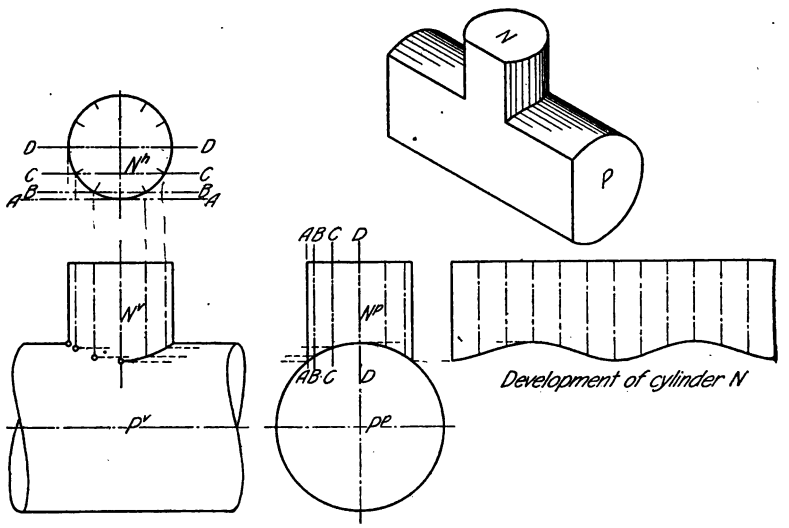

FIG. 215.—Intersection of two cylinders.

To Find the Intersection of Two Cylinders.—Fig. 215. In the position shown, three views or part views are necessary. The planes *A*, *B*, *C*, *D*, parallel to *V* and shown in the same relative position on top and end views, cut elements from each cylinder, the intersections of which are points on the curve. The pictorial sketch shows a section on one of the planes. The development of the upper cylinder is evident from the figure.

When the axes of the cylinders do not intersect, as in Fig. 216, the same method is used, but care must be taken in the choice of cutting planes. Certain "critical planes" give the limits and turning points of the curve. Such planes should always be taken through the contour elements. In the position shown the planes *A* and *D* give the width of the curve, the plane *B* the extreme length, and the plane *C* the tangent or turning points on the contour element of the vertical cylinder. After

determining the critical points a sufficient number of other cutting planes are used to give an accurate curve.

To develop the inclined cylinder, a right section at S–S is taken, whose stretchout would be a straight line. If the cutting planes are taken at random the elements would not be spaced uniformly. To simplify the development other planes may be assumed, by dividing the turned section into equal parts, as shown.

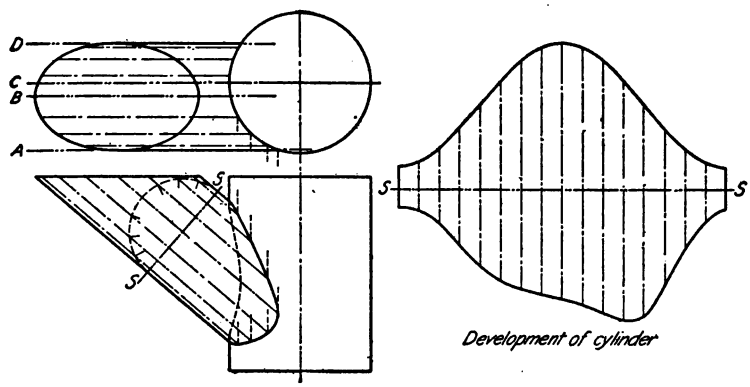

FIG. 216.—Intersection of two cylinders, axes not intersecting.

To Find the Intersection of a Prism and a Cone.—Fig. 217. In this case the choice of cutting planes would be made as parallel to H. Thus each plane would cut a circle from the cone and a hexagon from the prism, whose intersections would give points on the curve. The curve would be limited between the plane A cutting a circle whose diameter is equal to the short diameter of the hexagon and the plane C cutting a circle equal to the long diameter. As the prism is made up of six vertical planes the entire line of intersection of cone and prism would consist of the ends of six hyperbolas, three of which are visible, one showing its true shape, as cut by the plane D, the other two foreshortened. This illustrates the true curve on a chamfered hexagonal bolt head or nut. In practice it is always drawn approximately with three circle arcs.

To Find the Intersection of a Prism and a Sphere.—Fig. 218. In this case the curve consists of six circle arcs. Of the three visible arcs one shows its true shape, as cut by the plane D, the other two are the ends of ellipses. The cutting planes may be chosen parallel to H as in the previous problem, or parallel to V

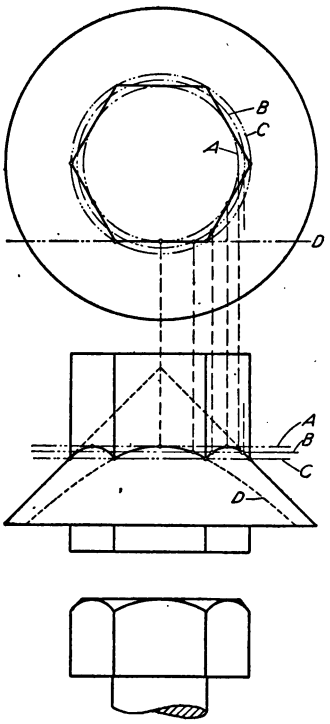

FIG. 217.—Intersection of prism and cone.

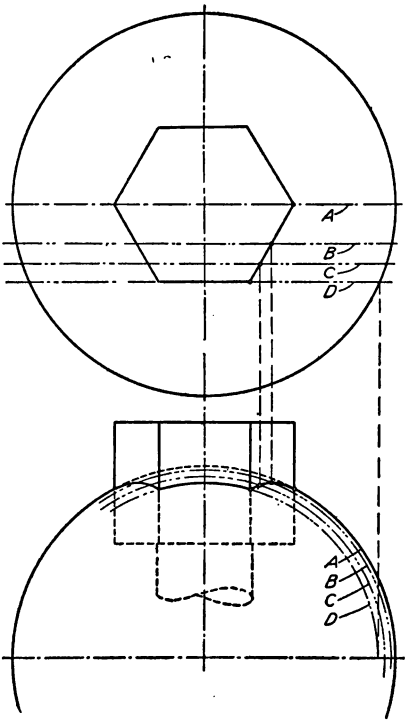

FIG. 218.—Intersection of prism and sphere.

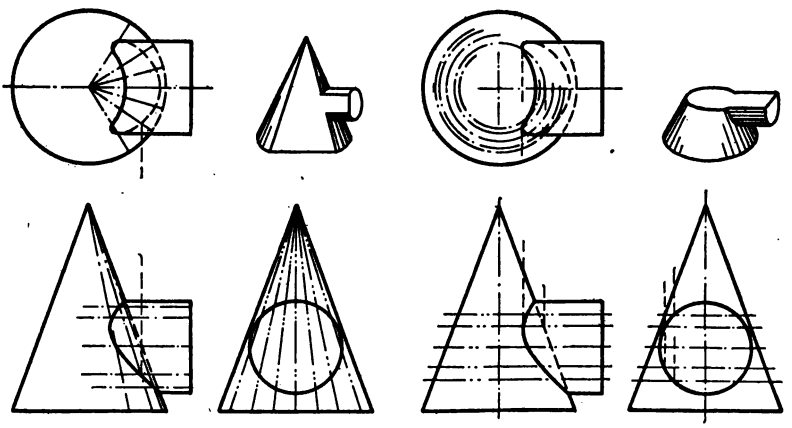

FIG. 219.—Intersection of cylinder and cone.

as shown in the figure, in which each plane (*A*, *B*, *C*, *D*), cuts a circle from the sphere and vertical lines from the prism. This is the curve of a rounded hexagonal bolt head or nut, in which again three circle arcs are used in practical work.

To Find the Intersection of a Cylinder and a Cone.—Fig. 219. Here the cutting planes may be taken so as to pass through the vertex of the cone and parallel to the elements of the cylinder, thus cutting elements from both cylinder and cone; or with a right cone they may be taken parallel to the base as so to cut circles from the cone. Both are illustrated in the figure. Some judgment is necessary in the selection both of the direction and number of the cutting planes. More points need be found at the places of sudden curvature or changes of direction of the projections of the line of intersection.

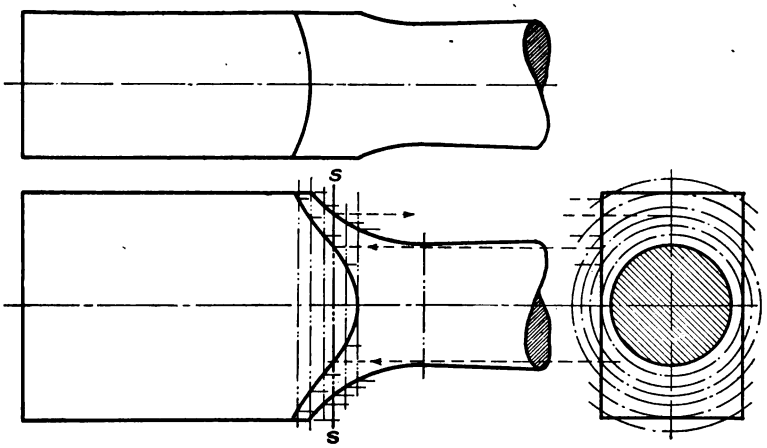

FIG. 220.—Intersection of a surface of revolution and a plane.

To Find the Intersection of a Plane and a Surface of Revolution.—Fig. 220. Planes perpendicular to the axis of any surface of revolution (right sections) will cut out circles. Thus the intersection of a surface of revolution and a plane is found by passing a series of planes perpendicular to the axis of revolution, cutting circles on the end view. The points at which these circles cut the "flat" are projected back as points on the curve.

PROBLEMS

Selections from the following problems may be constructed accurately in pencil without inking. Any practical problem can

be resolved into some combination of the "type solids," and the exercises given illustrate the principles involved in the various combinations.

An added interest in developments may be found by working the problems on suitable paper, allowing for fastenings and lap, and cutting them out. It is recommended that at least one or two models be constructed in this way.

In the sheet metal shops development problems unless very complicated are usually laid out directly on the iron.

The following figures and their developments may be drawn in a space 7″ × 10″.

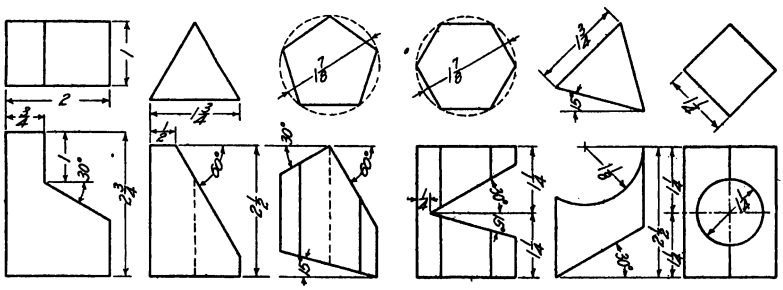

FIG. 221.—Prisms, Probs. 1 to 6.

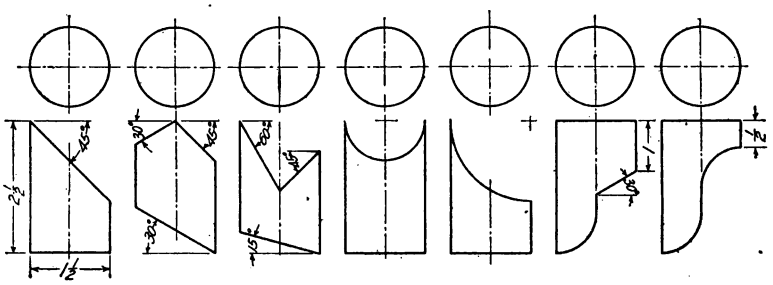

FIG. 222.—Cylinders, Probs. 7 to 13.

Group I. Prisms. Fig. 221.

1, 2, 3. Develop entire surface of the prisms.

4, 5, 6. Develop lateral surface of the prisms.

Group II. Cylinders. Fig. 222.

7 to 11. Develop entire surface of the cylinders.

12, 13. Develop lateral surface of the cylinders.

Group III. Prisms and Cylinders. Fig. 223.

14, 15, 16, 17. Develop lateral surfaces.

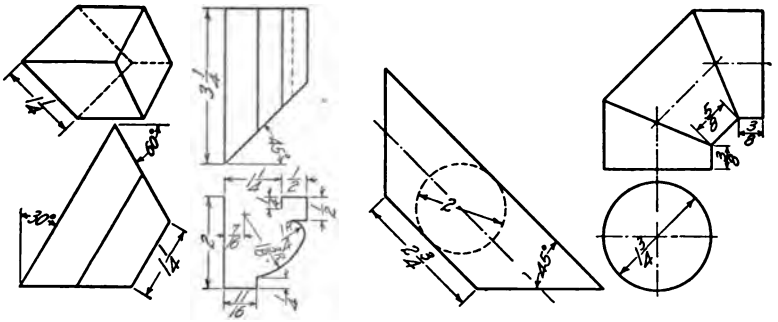

FIG. 223.—Prisms and cylinders, Probs. 14 to 17.

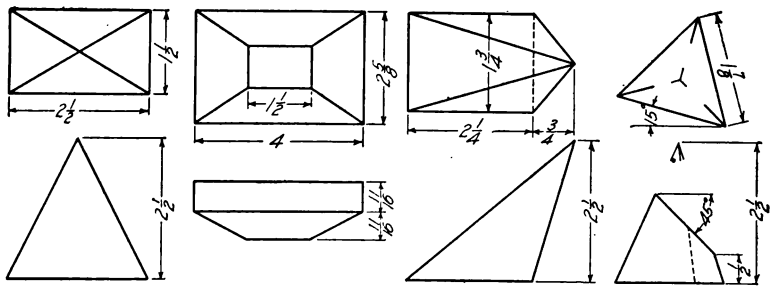

FIG. 224.—Pyramids, Probs. 18 to 21.

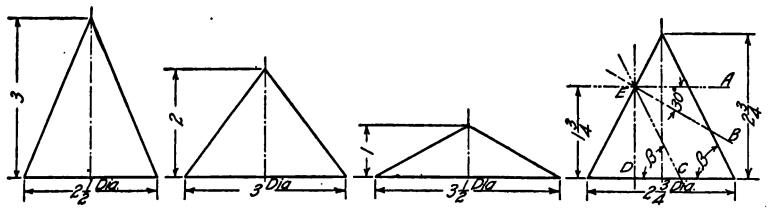

FIG. 225.—Cones, Probs. 22 to 25.

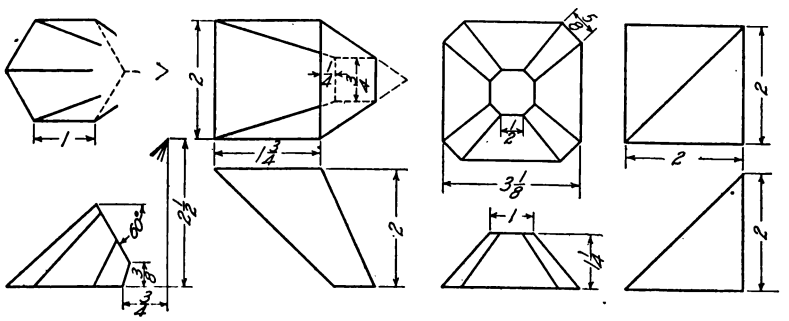

FIG. 226A.—Pyramids, Probs. 26 to 29.

Group IV. Pyramids. Fig. 224.

18, 19, 20. Develop lateral surfaces.

21. Develop entire surface.

Group V. Cones. Fig. 225.

22, 23, 24. Develop lateral surfaces.

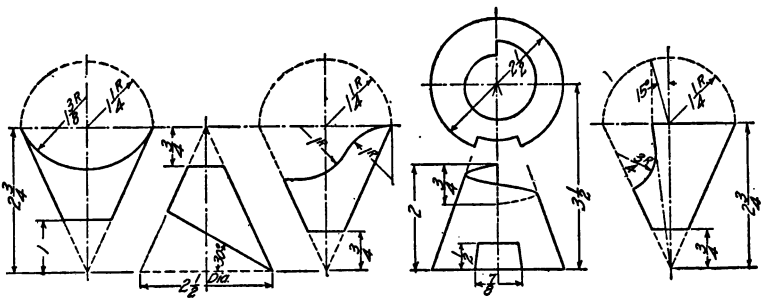

FIG. 226B.—Cones, Probs. 30 to 34.

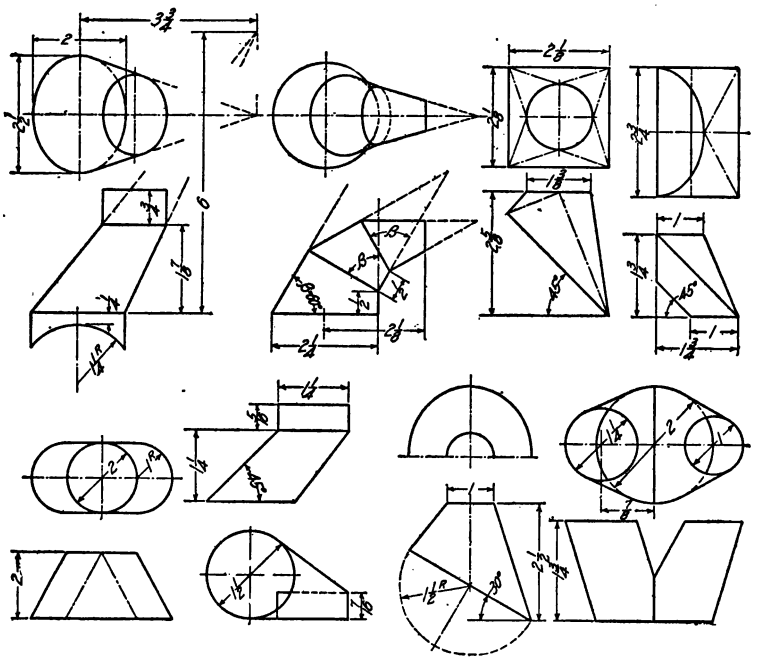

FIG. 227.—Transition pieces, Probs. 35 to 42.

25, *A*, *B*, *C* and *D*. Develop surface of cone cut by one of the planes. Show true size of cut surface. (Conic sections, Fig. 77.)

Group VI. Pyramids and Cones. Fig. 226.

26 to 34. Develop lateral surfaces.

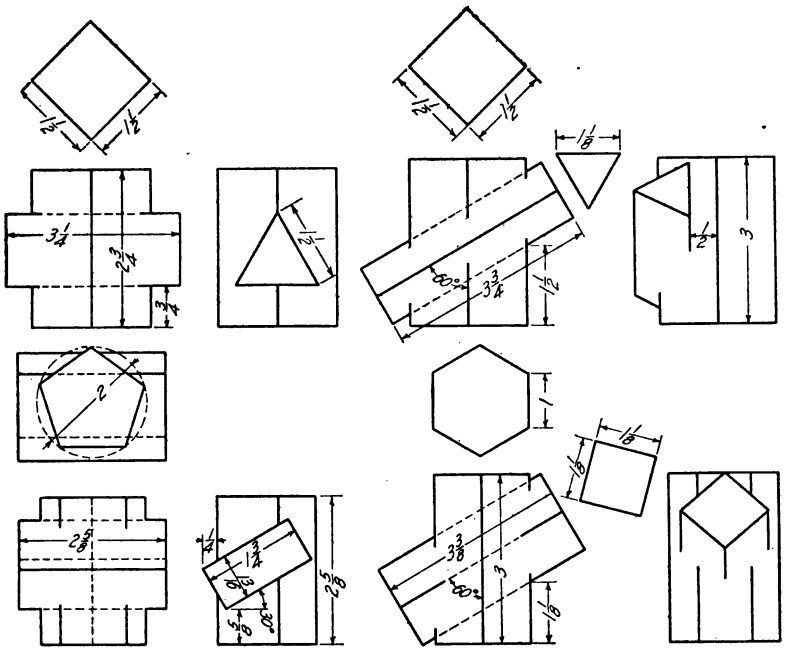

FIG. 228.—Intersections of prisms, Probs. 43 to 46.

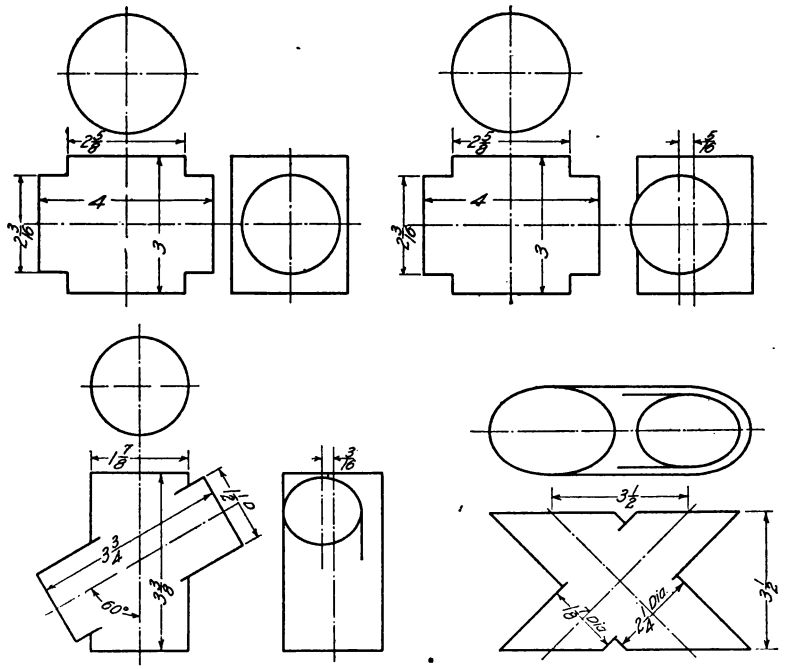

FIG. 229.—Intersections of cylinders, Probs. 47 to 50.

Group VII. Transition Pieces. Fig. 227.

35 to 42. Develop lateral surfaces.

Group VIII. Intersection of Prisms. Fig. 228.

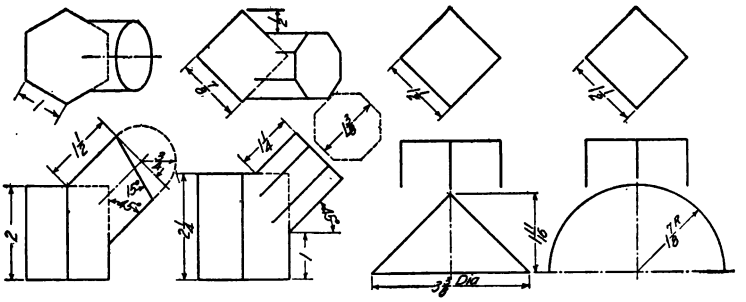

FIG. 230.—Intersections, Probs. 51 to 54.

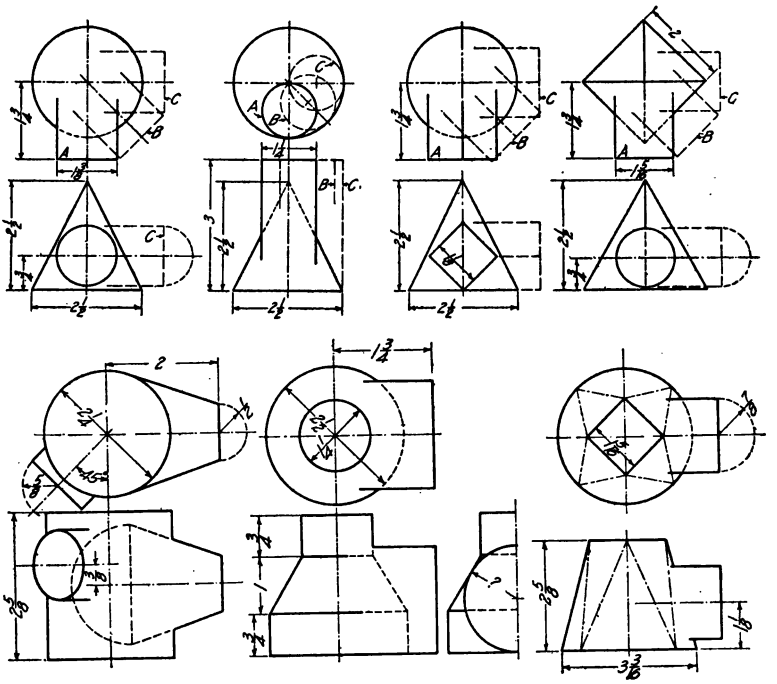

FIG. 231.—Cylinder and cone intersections, Probs. 55 to 61.

43 to 46. Find line of intersection. Use particular care in indicating visible and invisible portions of curves.

Group IX. Intersection of Cylinders. Fig. 229.

47 to 50. Find line of intersection. Use particular care in indicating visible and invisible portions of curves.

Group X. Intersections. Fig. 230.

51, 52. Find line of intersection.

53. Find line of intersection, cone and square prism, and complete to form one view of a chamfered square bolt head (see Fig. 318).

54. Sphere and square prism. Complete to form rounded bolt head.

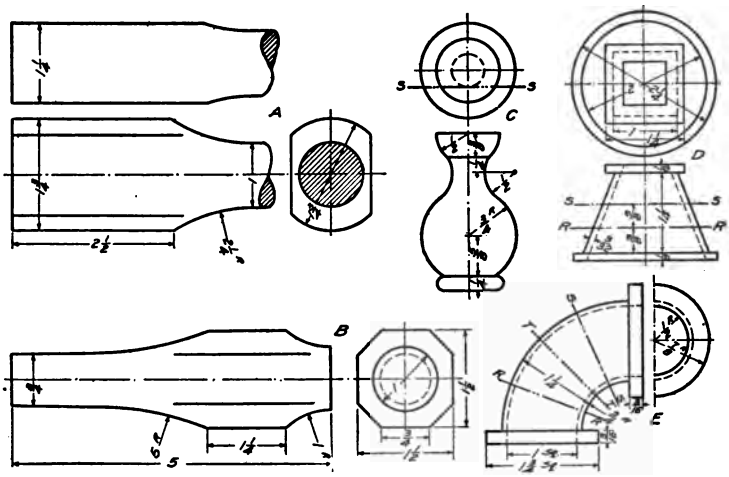

FIG. 232.—Intersection of surfaces and planes, Probs. 62 to 66.

Group XI. Intersections. Fig. 231.

55 to 61. Find line of intersection.

Group XII. Surfaces Cut by Planes. Fig. 232.

62, 63, 65. Complete views showing lines of intersection.

64, 66. Make separate views of sections on planes indicated.

CHAPTER VIII

Pictorial Representation

We have noted the difference between perspective drawing and orthographic projection. Perspective drawing shows the object as it appears to the eye, but its lines cannot be measured directly. Orthographic projection shows it as it really is in form and dimensions, but to represent the object completely we have found that at least two projections were necessary, and that an effort of the geometrical imagination was required to visualize it from these views. To combine the pictorial effect of perspective drawing with the possibility of measuring the principal lines directly, several kinds of one plane projection or conventional picture methods have been devised, in which the third dimension is taken care of by turning the object in such a way that three of its faces are visible. With the combined advantages will be found some serious disadvantages which limit their usefulness. They are distorted until the appearance is often unreal and unpleasant; only certain lines can be measured; the execution requires more time, particularly if curved lines occur, and it is difficult to add many figured dimensions, but with all this, the knowledge of these methods is extremely desirable and they can often be used to great advantage. Mechanical or structural details not clear in orthographic projection may be drawn pictorially, or illustrated by supplementary pictorial views. Technical illustrations, patent office drawings and the like are made advantageously in one plane projection; layouts and piping plans may be shown, and many other applications will occur to draftsmen who can use these methods with facility. One of the uses to which we shall apply them is in testing the ability to read orthographic projections by translating into pictorial representation.

There are two general divisions of pictorial projection, axonometric, with its divisions into isometric, dimetric and trimetric, and oblique projection with its variation of cabinet projection. Other methods not theoretically correct, but effective, are sometimes used.

Isometric Drawing.—The simplest of these systems is isometric drawing. If a cube in orthographic projection, Fig. 233, be conceived as revolved about a vertical axis through 45 degrees, then tilted forward until the edge AD is foreshortened with AB and AC, the front view in this position is said to be in isometric (equal measure) projection. The three lines AB, AC, and AD make equal angles with each other and are called the isometric axes. Since parallel lines have their projections parallel, the other edges of the cube will be respectively parallel to these axes. Any line parallel to an isometric axis is called an isometric

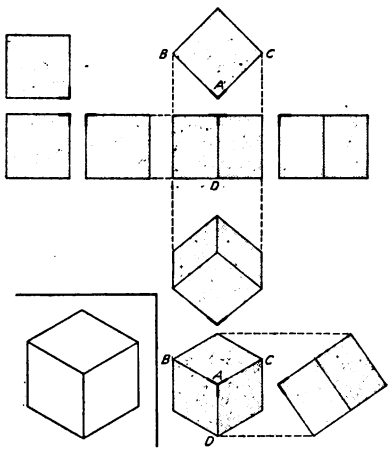

FIG. 233.—The isometric cube.

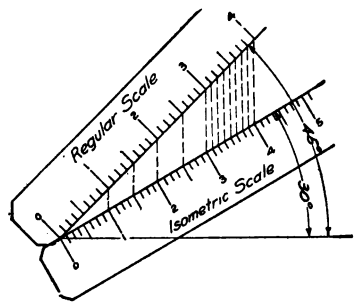

FIG. 234.—Isometric scale.

line, and the planes of these axes and all planes parallel to them are called isometric planes. It will thus be noticed that any line or plane which in its orthographic projection is perpendicular to either of the reference planes, will be an isometric line or plane.

In this isometric projection the lines have been foreshortened to approximately $^{81}/_{100}$ of their length and an isometric scale to this proportion *might* be made as drawn in Fig. 234. If the amount of foreshortening be disregarded and the full lengths laid off on the axes, a figure slightly larger but of exactly the same shape would result. This is known as *isometric drawing*. As the effect of increased size is usually of no consequence, and the advantage of measuring the lines directly with an ordinary scale is a great convenience, isometric drawing is used almost exclusively instead of isometric projection.

To Make an Isometric Drawing.—If the object is rectangular start with a point representing a front corner and draw from it the three isometric axes 120° apart, drawing one vertical, the other two with the 30° triangle, Fig. 235. On these three lines measure the length, breadth, and thickness of the object, as indicated, through these points draw lines parallel to the axes,

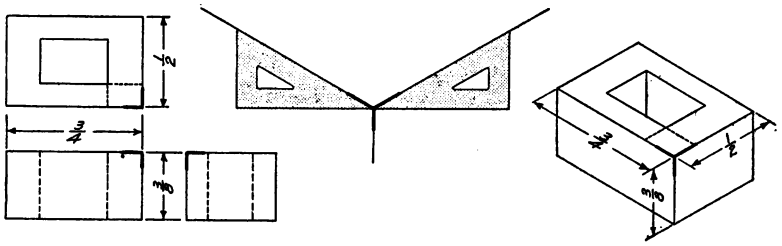

FIG. 235.—Isometric axes. First position.

completing the figure. To draw intelligently in isometric it is only necessary to remember the direction of the three principal isometric planes. Hidden lines are always omitted except when necessary for the description of the piece.

It is often more convenient to start from a lower front corner, drawing axes as illustrated in Fig. 236.

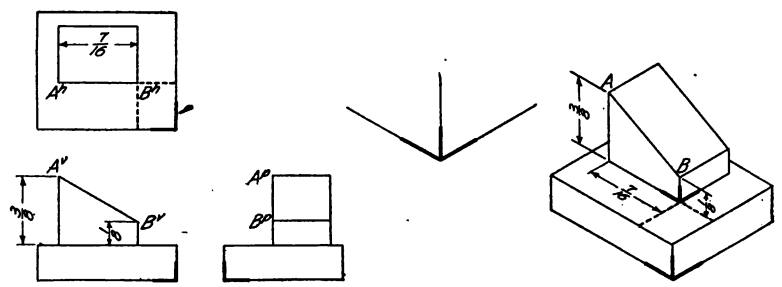

FIG. 236.—Isometric axes. Second position.

Lines not parallel to one of the isometric axes are called non-isometric lines. The one important rule is, *measurements can be made only on isometric lines;* and conversely, measurements cannot be made on non-isometric lines. For example the diagonals of the face of a cube are non-isometric lines, and although equal in length, will evidently be of very unequal length on the isometric drawing of the cube.

Objects Containing Non-isometric Lines.—Since a non-isometric line does not appear in its true length, its extremities must be located and the line found by joining these points. In Fig. 236, AB is a non-isometric line, found by drawing the two perpendicular isometric lines and joining their ends.

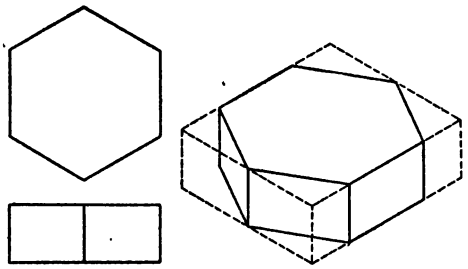

FIG. 237.—Box construction. Prism.

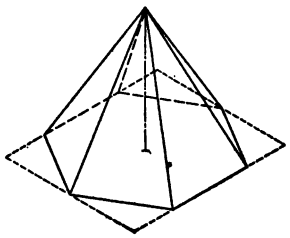

FIG. 238.—Pyramid.

When the object contains many non-isometric lines it is drawn either by the "boxing" method or the "offset" method. In the first method the object is enclosed in a rectangular box, which is drawn in isometric and the object located in it by its points of contact, as in Figs. 237 and 239. It should be noted that lines

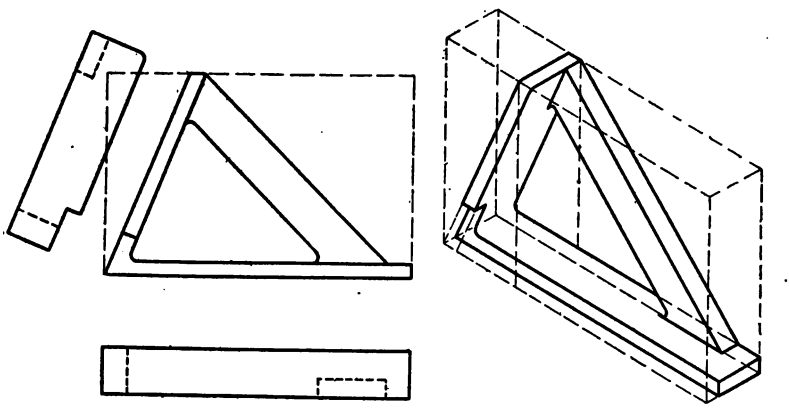

FIG. 239.—Box construction.

which are parallel on the object are parallel on the isometric view. Knowledge of this may often be used to save a large amount of construction, as well as to test for accuracy. Fig. 237 might be drawn by putting the top face into isometric and drawing vertical lines equal in length to the edges downward from each corner.

It is not always necessary actually to enclose the whole object in a rectangular "crate." The pyramid, Fig. 238 would have its base enclosed in a rectangle and the apex located by erecting a vertical axis from the center.

The object shown in Fig. 239 is composed almost entirely of non-isometric lines. In such cases the isometric view cannot be

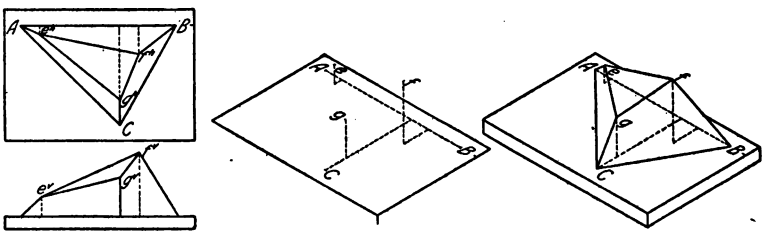

FIG. 240.—Offset construction.

drawn without first making the orthographic views necessary for boxing. In general the boxing method is adapted to objects which have the non-isometric lines in isometric planes.

When the object is made up of planes at a number of different angles it is better to locate the ends of the edges by the "offset" method. In this method perpendiculars are dropped from each

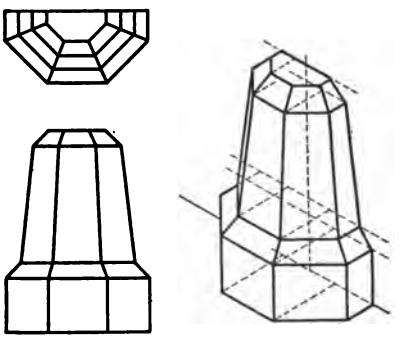

FIG. 241.—Offset construction.

point to an isometric reference plane. These perpendiculars, which are isometric lines, are located on the drawing by isometric coördinates, the dimensions being taken from the orthographic views. In Fig. 240 the line AB of the figure is used as a base line and measurements made from it as shown. Fig. 241 is another example of "offset" construction, working from a vertical plane.

Of course angles in isometric drawing cannot be measured in degrees, so it is necessary to locate the direction of the including sides by ordinates, as in Fig. 242. This is well illustrated in Fig. 239.

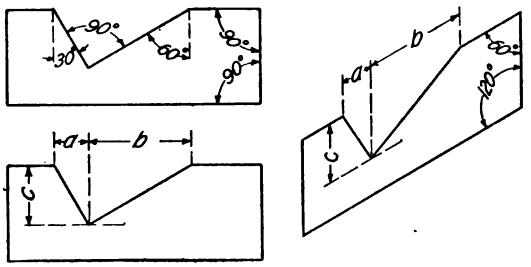

FIG. 242.—Construction for angles.

Objects Containing Curved Lines.—It is obvious that a circle or any curve on the face of a cube will lose its true shape when the cube is drawn in isometric. A circle on any isometric plane will be projected as an ellipse.

Any curve may be drawn by plotting points on it from isometric reference lines, as in Fig. 243. A circle plotted in this way is shown in Fig. 244.

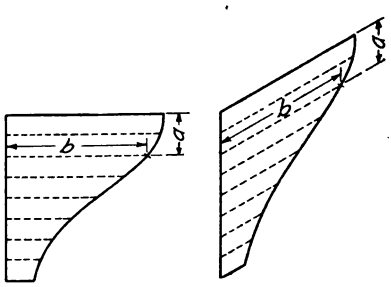

FIG. 243.—Construction for curves.

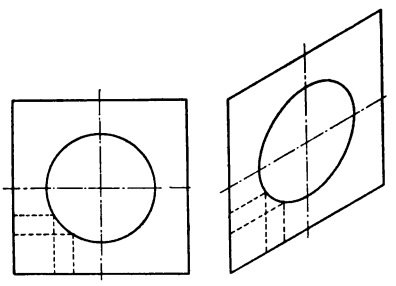

FIG. 244.—Circle. Points plotted.

The usual method for drawing an **isometric circle** is by a four-centered approximation, which is sufficiently accurate for all ordinary work. The center for any arc tangent to a straight line lies on a perpendicular from the point of tangency. If perpendiculars be drawn from the middle point of each side of the circumscribing square, the intersections of these perpendiculars will be centers for arcs tangent to two sides, Fig. 245. Two of these intersections will evidently fall at the corners *A* and *B* of

the square, as the lines are altitudes of equilateral triangles. The construction of Fig. 245 may thus be made by simply drawing 60-degree lines from the corners, A and B.[1] To draw any circle arc, the isometric square of its diameter should be drawn in the plane

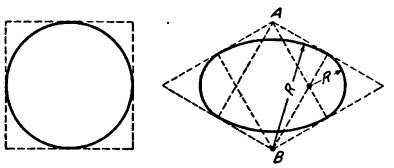

FIG. 245.—Circle. Four center approximation.

of its face, with as much of this construction as is necessary to find centers for the part of the circle needed. Thus for a quarter-circle measure the true radius of the circle from the corner on the two isometric lines and draw perpendiculars from these points, Fig. 246. Their intersection will be the required center for the isometric radius.

The isometric drawing of a sphere would be a circle with its diameter equal to the long axis of the ellipse inscribed in the isometric square of the real diameter of the sphere, as this ellipse would be the isometric of a great circle of the sphere.

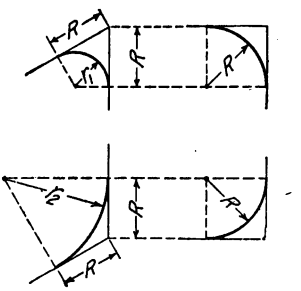

FIG. 246.—Isometric radii.

Reversed Axes.—It is often desirable to show the lower face of an object by tilting it back instead of forward, thus reversing the axes to the position of Fig. 248. The construction is just the same, but the directions of the principal isometric planes must be kept in mind. Fig. 249 shows the application of circle arc

[1] NOTE.—If a true ellipse be plotted in the same square as this four centered approximation it will be a little longer and narrower, and of more pleasing shape, but in the great majority of drawings the difference is not sufficient to warrant the extra expenditure of time required in execution. The construction of a closer approximation with eight centers is illustrated in Fig. 247. This might be used when a more accurate drawing of an inscribed circle is required.

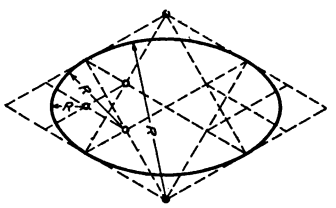

FIG. 247.—Eight centered approximation.

construction on the three visible faces of a reversed axis drawing. A practical use of reversed axis construction is in the representa-

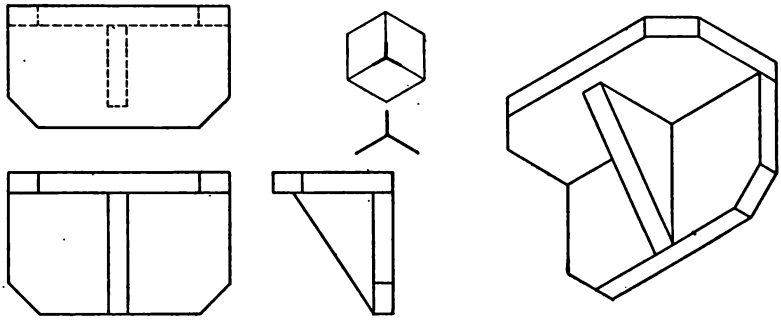

FIG. 248.—Reversed axes.

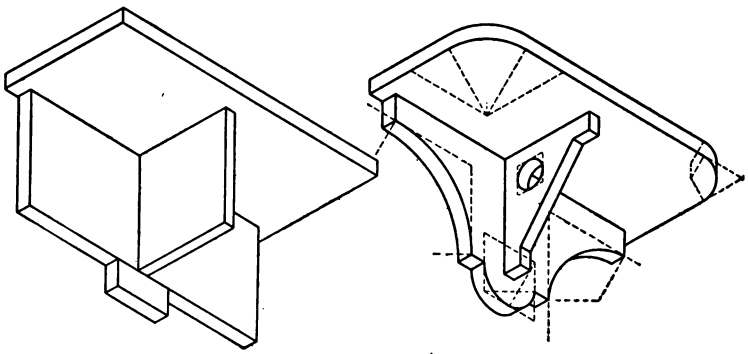

FIG. 249.—Construction with reversed axes.

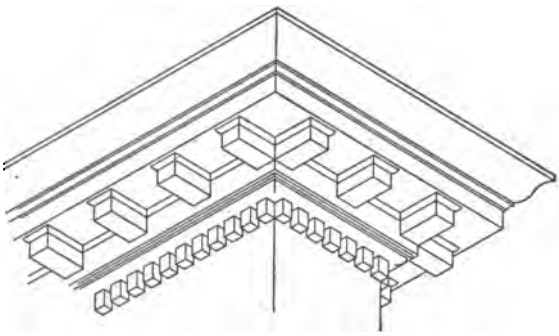

FIG. 250.—Architectural detail with reversed axes.

tion of such architectural features as are naturally viewed from below. Fig. 250 is an example.

Sometimes a piece may be shown to better advantage with the main axis horizontal, as in Fig. 251.

Isometric Sections.—Isometric drawings are, from their pictorial nature, usually outside views, but sometimes a sectional

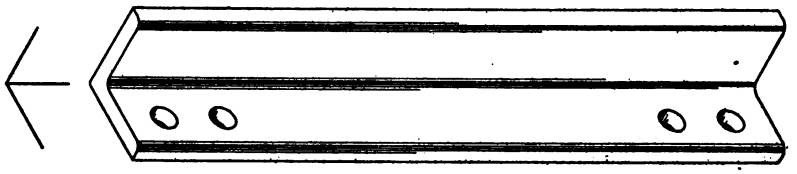

FIG. 251.—Main axis horizontal.

view may be employed to good advantage to show a detail of shape or interior construction. The cutting planes are taken as isometric planes and the section lining done in a direction to give the best effect. As a general rule a half-section would be made by outlining the figure in full, then cutting out the front quarter by two isometric planes as in Fig. 252, while for a full section, the cut face would be drawn first and the part of the object behind it added afterward, Fig. 253.

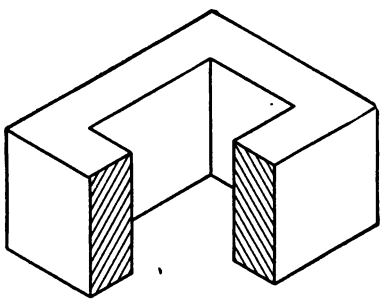

FIG. 252.—Isometric half section.

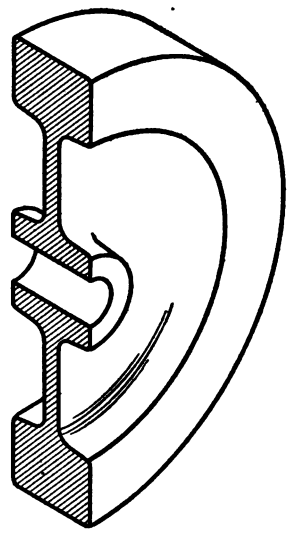

FIG. 253.—Isometric section.

Oblique Projection.—This method, called also oblique drawing and sometimes cavalier projection, is based on the theoretical principle that with one face of the object parallel to the picture plane, if the projectors instead of being perpendicular to it as in orthographic and isometric are taken so as to make an angle of

45 degrees with it from any direction, lines perpendicular to the plane instead of being represented as points would be projected in their true length. A projecting line may be thought of as the hypotenuse of a 45-degree triangle with one side against the vertical plane, the other side perpendicular to it. Fig. 254 illustrates the principle. The first panel shows the regular ortho-

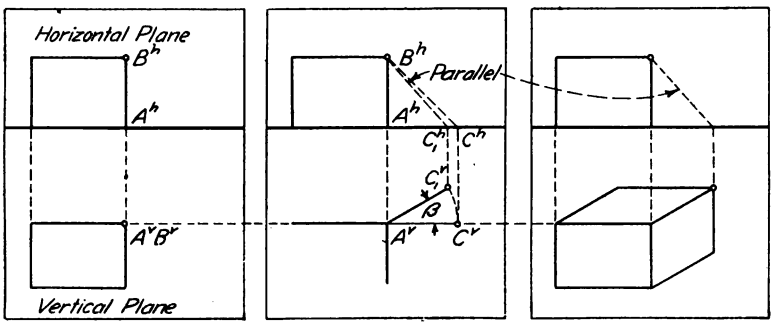

FIG. 254.—Oblique projection and the picture plane.

graphic projection of a rectangular block with its front face in the vertical plane. The line AB is thus projected as a point. An oblique projector from B will be the hypotenuse of a 45-degree right triangle of which AB is one side. When this triangle is horizontal the other side, in the picture plane, will be AC. If the triangle be revolved about AB through any angle β, C will revolve to C_1 and $A^vC_1^v$ will be the oblique projection of AB. Since $A^vC^v = A^hC^h$, $A^vC^v = AB$.

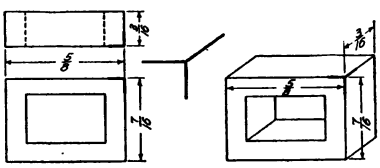

FIG. 255.—Oblique drawing.

To Make an Oblique Drawing.—Oblique drawing is similar to isometric drawing in having three axes representing three mutually perpendicular lines upon which measurements can be made. Two of the axes would always be at right angles to each other, being in a plane parallel to the picture plane, the third or cross axis may be at any angle, 30 degrees or 45 degrees being generally used. For a rectangular object, Fig. 255, start with a point

representing a front corner and draw from it the three oblique axes. On these three lines measure the length, breadth, and thickness of the object.

Any face parallel to the picture plane will evidently be projected without distortion, an advantage over isometric of particular value in the representation of objects with circular or irre-

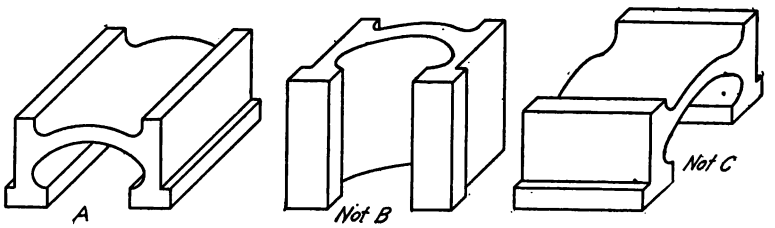

FIG. 256.—Illustration of first rule.

gular outline. The first rule for oblique projection is, *place the object with the irregular outline or contour parallel to the picture plane.* Fig. 256 *A* instead of *B* or *C*.

One of the greatest disadvantages in the use of either isometric or oblique drawing is the effect of distortion produced by the lack of convergence in the receding lines, the violation of perspective.

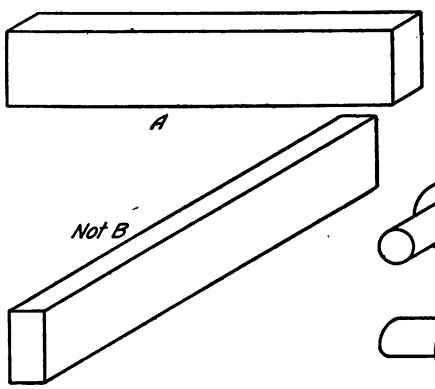

FIG. 257.—Illustration of second rule.

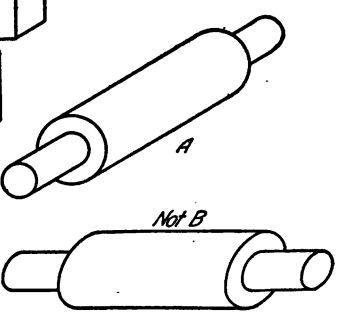

FIG. 258.—Precedence of first rule.

This in some cases, particularly with large objects, becomes so painful as practically to prohibit the use of these methods. It is perhaps even more noticeable in oblique than in isometric, and, of course, increases with the length of the cross axis. Hence the second rule, *always have the longest dimension parallel to the picture plane.* *A* not *B* in Fig. 257.

In case of conflict between these two rules *the first should have precedence*, as the advantage of having the irregular face without distortion is greater than is gained by the second rule, Fig. 258.

It will be noted that so long as the front of the object is in one plane parallel to the plane of projection, the front face of the

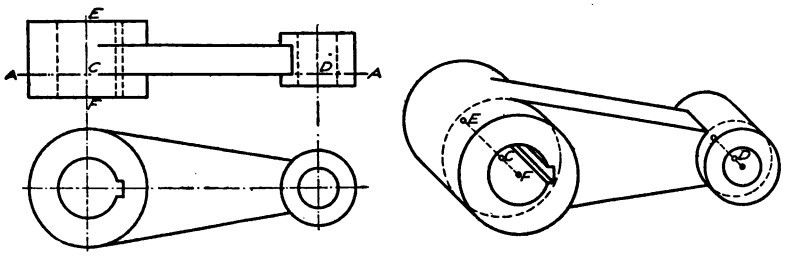

FIG. 259.—Offsets from reference plane.

oblique projection is exactly the same as the orthographic. When the front is made up of more than one plane, particular care must be exercised in preserving the relationship by selecting one as the starting plane and working from it. In such a figure as the link, Fig. 259, the front bosses may be imagined as cut off on the plane A–A, and the front view, *i.e.*, the section on A–A

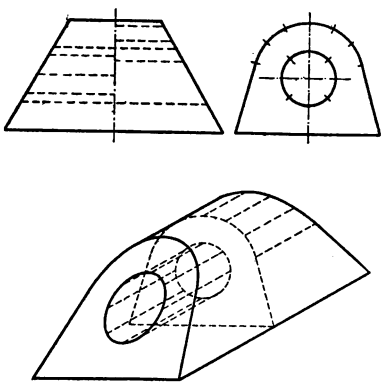

FIG. 260.—Offsets from right section.

drawn as the front of the oblique projection. On axes through the centers C and D the distances CE behind and CF in front may be laid off. When an object has no face perpendicular to its base it may be drawn in a similar way by cutting a right section and measuring offsets from it as in Fig. 260.

This offset method, previously illustrated in the isometric drawings, Figs. 240 and 241, will be found to be a most rapid and convenient way for drawing almost any figure, and it should be studied carefully.

Fig. 344 is an illustration of a piping lay-out, showing the value of pictorial drawing in explaining clearly what would be very difficult to represent in orthographic.

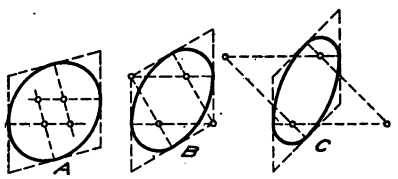

FIG. 261.—Oblique circle construction.

When necessary to draw circles on oblique faces they may either be plotted, or may be drawn approximately, on the same principle as Fig. 245, by erecting perpendiculars at the middle points of the containing square. In isometric it happens that one intersection falls in the corner of the square, and advantage is taken of the fact. In oblique its position depends on the angle of the cross axis. Fig. 261 shows three oblique squares at different angles and their inscribed circles.

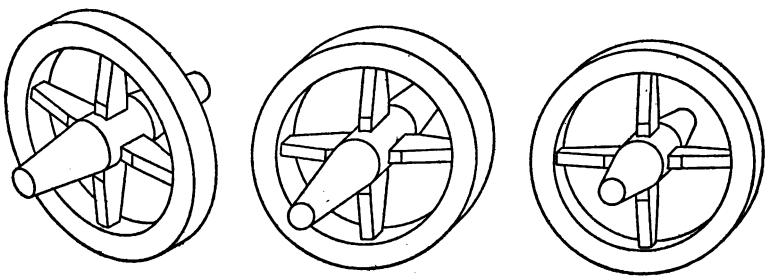

FIG. 262.—Isometric, oblique and cabinet drawing compared.

Cabinet drawing is a modification of oblique projection in which all the measurements parallel to the cross axis are reduced one-half, in an attempt to overcome the appearance of excessive thickness produced in oblique drawing. The comparative appearance of isometric, oblique and cabinet drawing is illustrated in Fig. 262.

Axonometric Projection.—The principle of isometric projection was shown in the double revolution of the cube. A cube might be revolved into any position showing three of its faces, and the angles and proportionate foreshortening of the axes used as the basis for a system of pictorial representation, known in general as axonometric (or axometric) projection. Isometric projection is therefore simply a special case in which the axes are foreshortened equally.

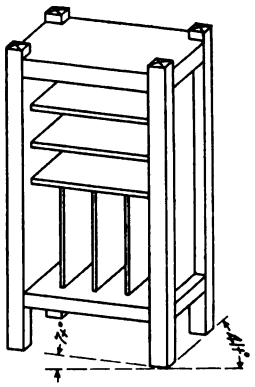

FIG. 263.—Dimetric projection

Other positions which would show less distortion may be chosen, but on account of the added time and special angles necessary for their execution are not often used.

When two axes are equal, and the third unequal, the system is sometimes called "dimetric" projection. A simple dimetric projection in which the ratios are $1:1:\frac{1}{2}$ is shown in Fig. 263. In this position the tangents of the angles are $\frac{1}{8}$ and $\frac{7}{8}$, making the angles approximately 7 and 41 degrees.

When the three axes are unequal it is called trimetric projection.

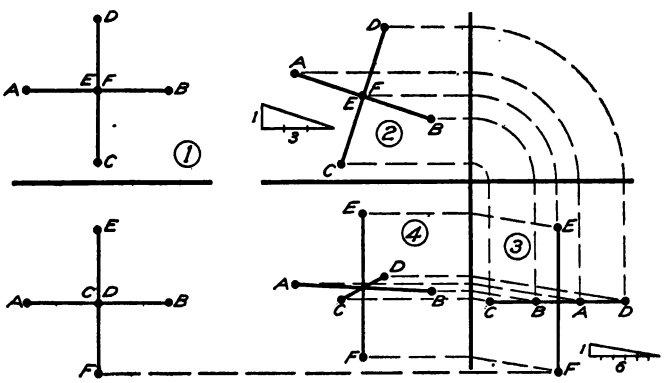

FIG. 264.—Analysis of clinographic axes.

Pictorial drawings are sometimes made without reference to the theory of projection, on axis combinations of 15° and 30°, 15° and 45°, 15° and 15°, 20° and 20°.

A simple and pleasing trimetric system known as *clinographic* projection is used in the drawing of crystal figures in mineralogy. It is a form of

oblique projection in which the figure is imagined as revolved about a vertical axis through an angle whose tangent is $\frac{1}{3}$, then the eye (at an infinite distance) elevated through an angle whose tangent is $\frac{1}{6}$. Fig. 264 is a graphic explanation: 1 represents the top and front views of the three axes of a cube; 2 is the top view revolved through $\tan^{-1} \frac{1}{3}$; 3 is the side view of (2); 4 is a front view projected from (2) and (3), the projectors from (3) being at $\tan^{-1} \frac{1}{6}$.

When used in crystallography a diagram of the axes is usually constructed very accurately on card-board, and used as a templet or stencil transferring

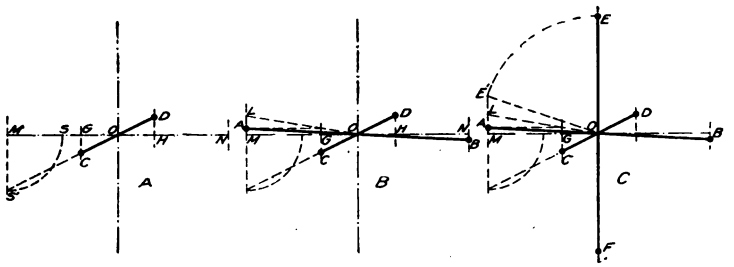

FIG. 265.—Stages of construction of clinographic axes.

the center and terminal points by pricking through to the sheet on which the drawing is to be made. Fig. 265 shows, in stages, a method of constructing this diagram, which as will be seen is simply a combination in one view of 2, 3 and 4 of Fig. 264. Take MON of convenient length, divide it into three equal parts, at G and H, and draw perpendiculars as shown. Make $MS = \frac{1}{2}MO$ and draw $S'OD$. Then CD will be one horizontal axis.

Make $ML = \frac{1}{2}OG$ and draw LO. Project the point of intersection of LO and GC back horizontally to LM at A, then AOB will be the other horizontal axis.

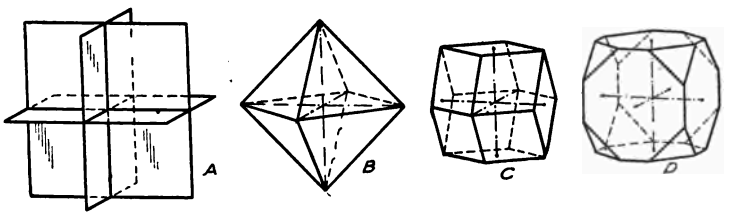

FIG. 266.—Crystals in clinographic projection.

To obtain length of vertical axis make $ME' = OG$, and lay off OE and $OF = OE'$.

The axial planes, and some crystals drawn on these axes, are shown in Fig. 266.

These axes are for the isometric system of crystals. Axes for the other crystal systems may be constructed graphically in the same way, by drawing their orthographic projections, revolving, and projecting to the vertical plane with oblique projectors as was done in Fig. 264.

Sketching.—One of the valuable uses of pictorial drawing is in making freehand sketches, either dimensioned to form working sketches or for illustrating some object or detail of construction. The following points should be observed.

Keep the axes flat. The beginner's mistake is in spoiling the appearance of his sketch by getting the axes too steep.

Keep parallel lines parallel.

Always block in squares before sketching circles.

In isometric drawing remember that a circle on the top face will be an ellipse with its axis horizontal.

Keep dimension and extension lines in the plane of the face.

Do not confuse the drawing with dotted lines.

PROBLEMS

The following problems are intended to serve two purposes; they are given first, for practice in the various methods of pictorial representation, second, for practice in reading and translating orthographic projections.

In reading a drawing remember that a line on any view always means a corner or edge, and that one must always look at the

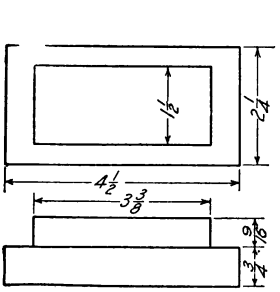

FIG. 267.—Prob. 1.

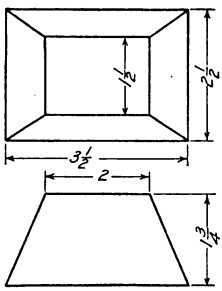

FIG. 268.—Prob. 2.

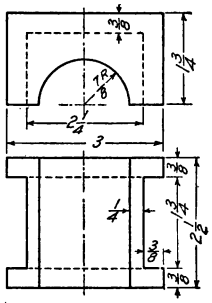

FIG. 269.—Prob. 3.

other view to find out what kind of a corner it is. Do not try, nor expect to be able, to read a whole drawing at one glance.

The problems may be drawn in a space 5 × 7 inches, and are arranged in groups for convenience in selection and assignment. Some of the figures in Chapter VI may be used for a still further variety of problems in this connection.

Do not show invisible lines except when necessary to explain construction.

Group I. Isometric Drawing. Problems 1 to 11.

Group II. Isometric Sections.

12 to 16. Draw isometric sections or half sections on planes indicated.

17, 18. Draw isometric section on plane *A–A*, Figs. 195, 196.

Group III. Oblique Drawing. Problems 19 to 28.

Group IV. Oblique Sections.

29 to 32. Draw oblique sections of Figs. 293 and 295. Oblique half sections of Figs. 294 and 296.

Group V. Cabinet and Dimetric Drawing. Problems 33 to 36.

Group VI. Reading Exercises. Figs. 301, 302.

These figures are to be sketched freehand in one of the pictorial systems, as a test in the ability to read orthographic projections.

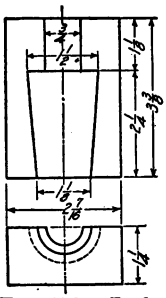

FIG. 270.—Prob. 4.

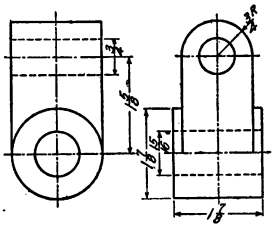

FIG. 271.—Prob. 5.

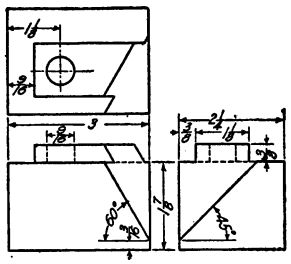

FIG. 272.—Prob. 6.

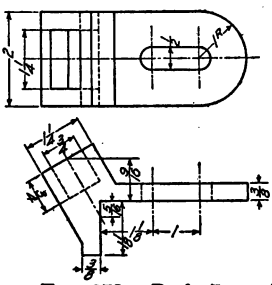

FIG. 273.—Prob. 7.

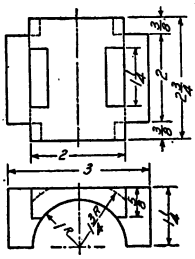

FIG. 274.—Prob. 8.

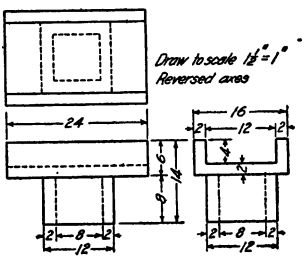

FIG. 275.—Prob. 9.

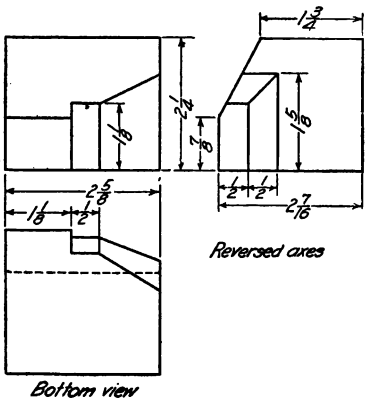

FIG. 276.—Prob. 10.

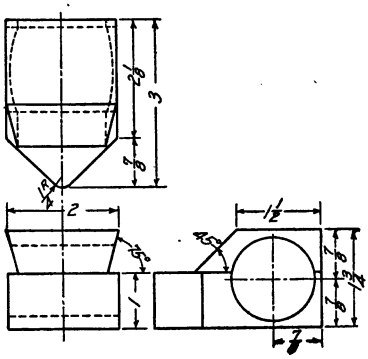

FIG. 277.—Prob. 11.

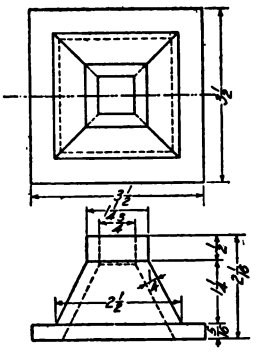

FIG. 278.—Prob 12.

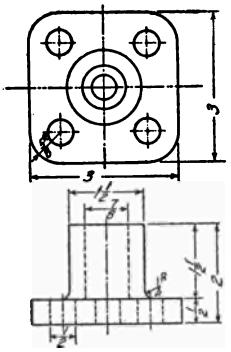

FIG. 279.—Prob. 13.

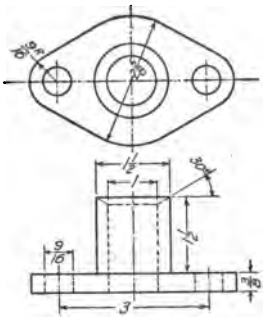

FIG. 280.—Prob. 14.

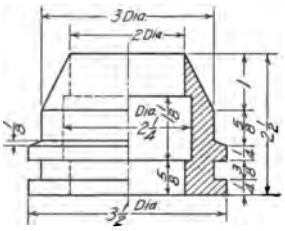

FIG. 281.—Prob. 15.

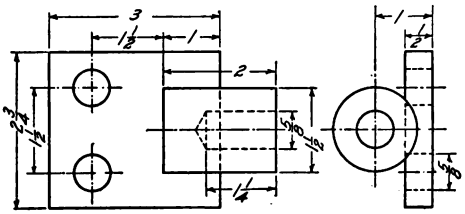

FIG. 282.—Prob. 16.

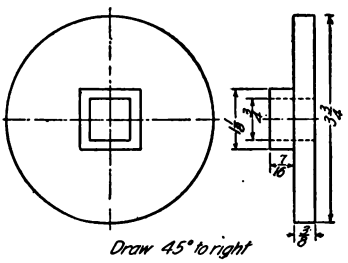

FIG. 283.—Prob. 19.

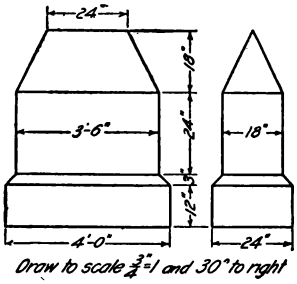

FIG. 284.—Prob. 20.

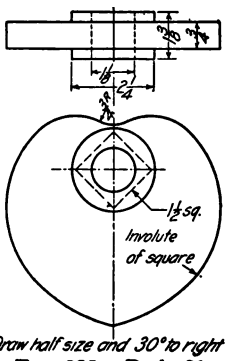

FIG. 285.—Prob. 21.

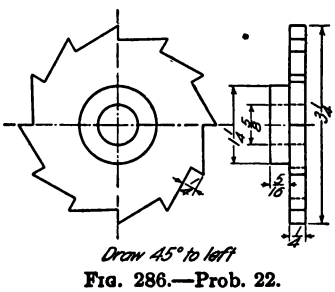

FIG. 286.—Prob. 22.

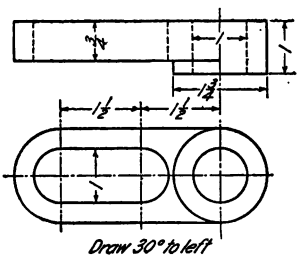

FIG. 287.—Prob. 23.

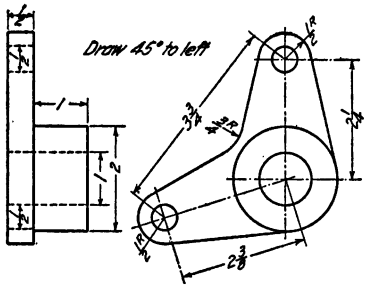

FIG. 288.—Prob. 24.

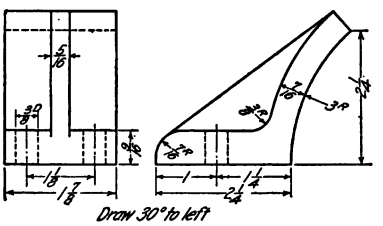

FIG. 289.—Prob. 25.

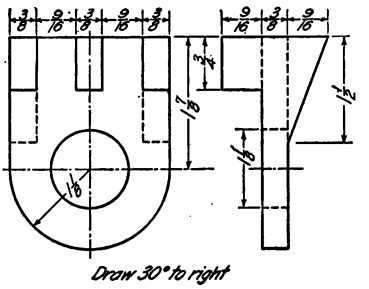

FIG. 290.—Prob. 26.

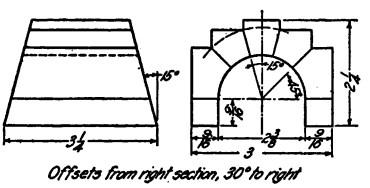

FIG. 291.—Prob. 27.

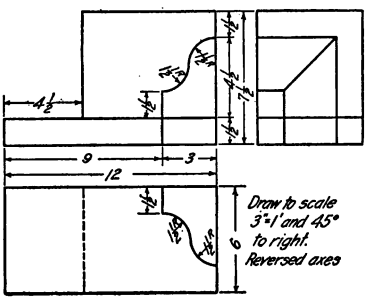

FIG. 292.—Prob. 28.

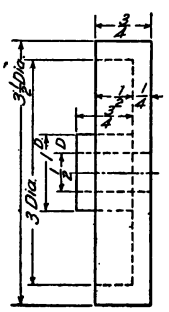

FIG. 293.—Prob. 29.

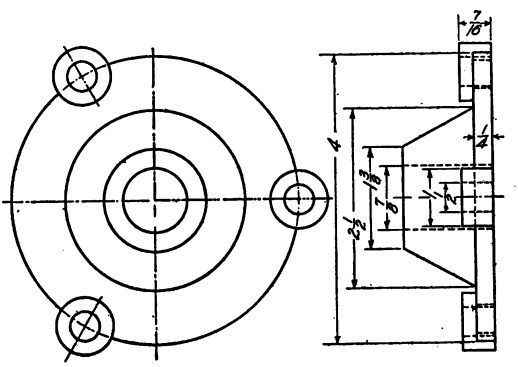

FIG. 294.—Prob. 30.

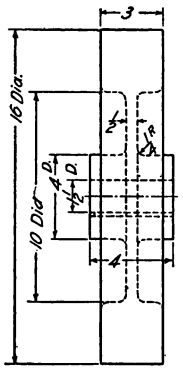

FIG. 295.—Prob. 31.

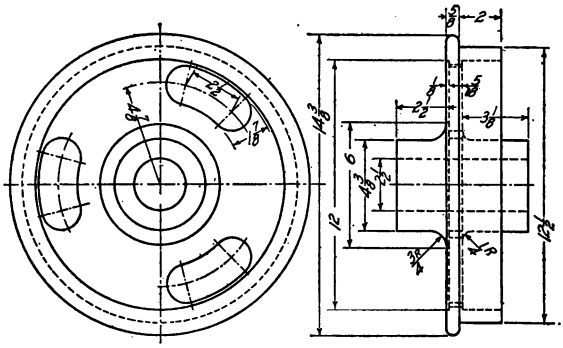

FIG. 296.—Prob. 32.

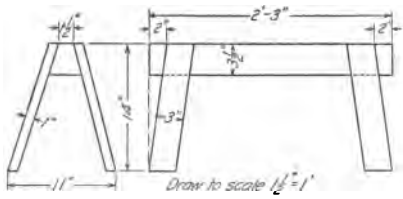

FIG. 297.—Prob. 33.

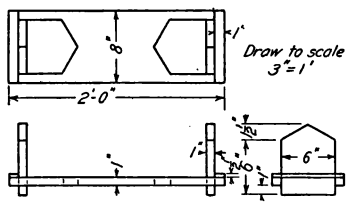

FIG. 298.—Prob. 34.

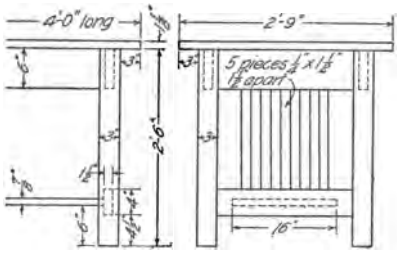

FIG. 299.—Prob. 35.

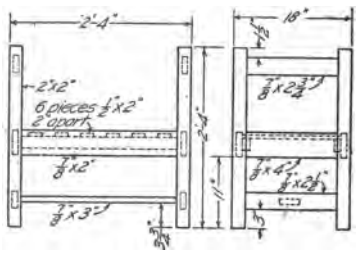

FIG. 300.—Prob. 36.

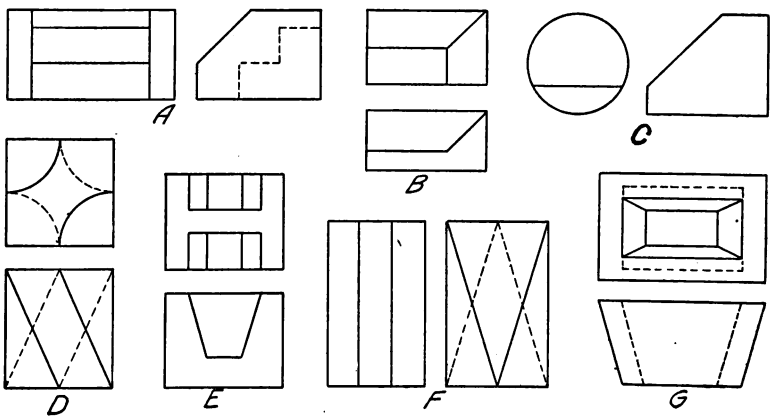

FIG. 301.—Reading exercises.

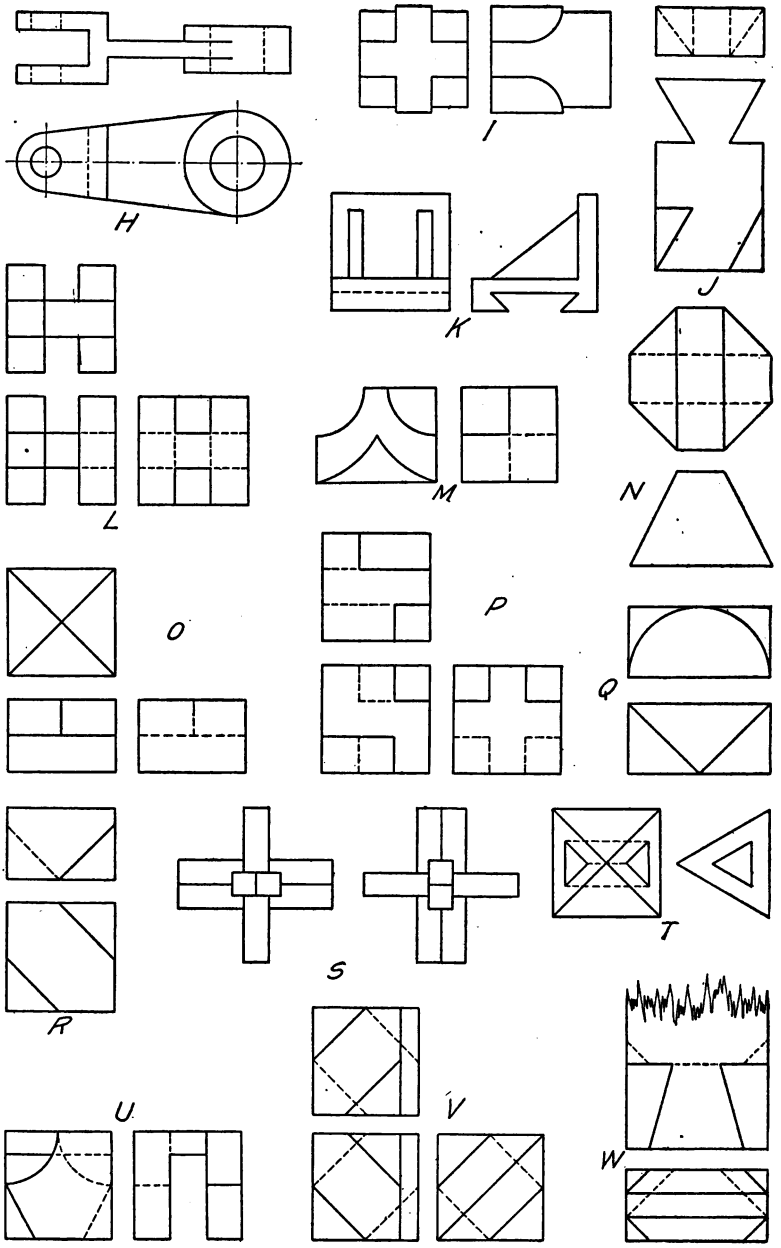

FIG. 302.—Reading exercises.

CHAPTER IX

Bolts, Screws, Keys, Rivets and Pipe

The previous chapters of this book have been devoted to the theory, or grammar, of the language of drawing, and the problems and illustrations have been largely separate pieces. In the practical application of the language in making working drawings there occurs the necessity of representing the methods of fastening parts together, either with permanent fastenings (rivets) or with removable ones (bolts, screws and keys), and the engineer must know the fundamental forms of these fastening parts and be thoroughly familiar with the conventional methods of their representation.

The one occurring most frequently is of course the bolt, which is illustrated in pictorial form in Fig. 303. It will be noted that

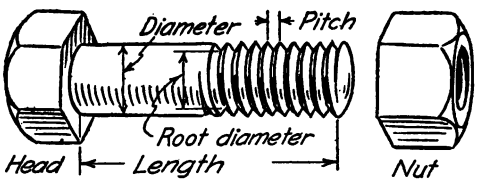

Fig. 303.—Hex head bolt and nut.

the nominal length of a bolt is the length under the head, and the diameter is the size of the shaft on which the threads are cut.

Forms of Threads.—Screws are used for fastenings, for adjustment, and for transmitting power or motion. For these different purposes several different forms of threads are in use, Fig. 304. For fastenings the *United States Standard* (sometimes called the Franklin Institute, and Sellers standard) is the commonest, and in this country is the form intended when not otherwise specified. It is a V shape at 60 degrees with the top flattened one-eighth of its height, which lessens the liability of its being injured, and the root filled in the same amount, thus increasing the strength of the bolt. In drawing, these flats need not be represented.

The *sharp V* at 60 degrees is still used although it has little to recommend it.

The British standard is the *Whitworth* thread, cut at 55 degrees, with tops and roots rounded one-sixth of the depth of the triangle as shown in the figure.

For transmitting power or motion these *V* shapes are not desirable as part of the thrust tends to burst the nut. The *square* thread is a preferred form as it puts all the force parallel to the axis of the screw. It can have, evidently, only half the number of threads per inch as a *V* thread of the same size, and thus in shear is only half as strong. The *Acme*, or 29-degree thread is a

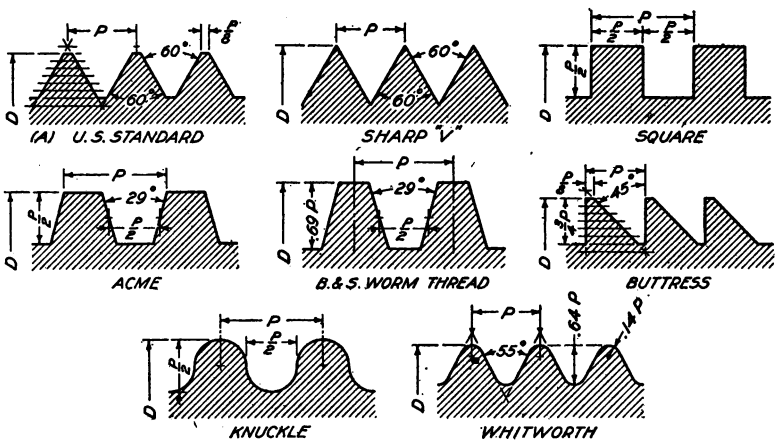

FIG. 304.—Forms of screw threads.

modification used very generally. It permits the use of a disengaging, or split nut, which cannot be used on a square thread. The *buttress* thread, for transmitting power in one direction has the strength of the *V* thread. It is sometimes called the breechlock thread as it is used to take the recoil in guns.

The *knuckle* thread is used for rough work, and can be cast in a mold. It may be seen in shallower form in sheet metal rolled threads, as on an ordinary incandescent lamp.

The Helix.—A helix is the line of double curvature generated by a point revolving at a uniform rate about an axis while moving along uniformly in the direction of the axis. Thus a point on the tool cutting a thread on a rotating shaft describes a helix. The surface of the thread is a helicoid. The distance advanced parallel to the axis in one revolution is called the lead.

A more general definition might be stated thus—a helix is a space curve generated by a point moving uniformly along a straight line while the line revolves uniformly about another line as an axis.

If the moving line is parallel to the axis it will generate a cylinder, and the word "helix" alone always means a cylindrical helix, as discussed above. If the moving line intersects the axis (at an angle less than 90°) it will generate a cone and the curve made by the moving point will be a "conical helix." When the angle becomes 90 degrees the helix degenerates into a spiral.

To Draw the Projection of a Helix.—Fig. 305. Divide the circle of the end view of the cylinder into a number of equal parts,

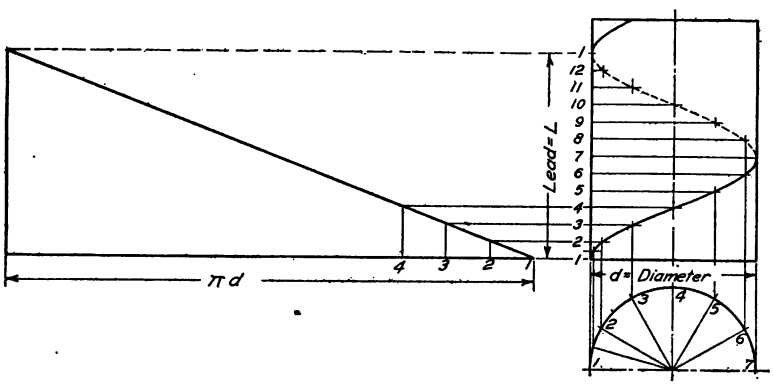

FIG. 305.—The helix and its development.

and the lead into the same number. As the point moves around through one division it will advance a proportional distance of the lead; when half way around the cylinder it will have advanced one-half the lead. Thus the curve may be found by projecting the elements represented by divisions of the circle to intersect lines drawn through corresponding divisions of the lead. If the cylinder be developed the helix will appear on it as a straight line inclined at an angle whose tangent is $\frac{L}{\pi d}$. The conical helix is drawn similarly, the lead being measured along the axis.

Screw Threads.—Threads are always understood to be single and right hand unless otherwise specified. A single thread has one thread of whatever section cut on the cylinder. When it is desired to give a more rapid advance without using a coarser

thread two or more threads are cut side by side, giving double, triple, etc., threads, as illustrated in Fig. 306.

A *right-hand* thread advances away from the body when turned clockwise. A left-hand thread is always marked plainly "L.H." and may be recognized also by the direction of the slant.

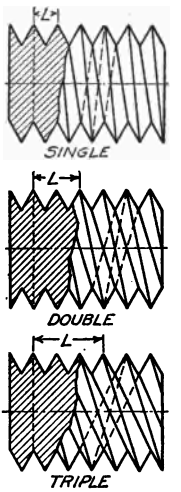

Fig. 306.—Multiple threads.

The pitch of a thread is the distance from center to center of consecutive threads. The lead has already been defined as the distance advanced in one revolution. In a single thread therefore the pitch and lead are equal, in a double thread the lead is twice the pitch, similarly for other multiple threads.

To draw a screw thread we must know the shape of the thread, and the diameter of the shaft on which it is cut. For accurate representation the thread shapes would be drawn, and the lines of their tops and bottoms shown as helices with the same pitch but different diameters, as illustrated in Fig. 307. If many threads are to be drawn a templet may be made by laying out the projections of the helices on a piece of card-board or thin wood and cutting out with a sharp knife.

This drawing of the actual curves of a screw is a laborious pro-

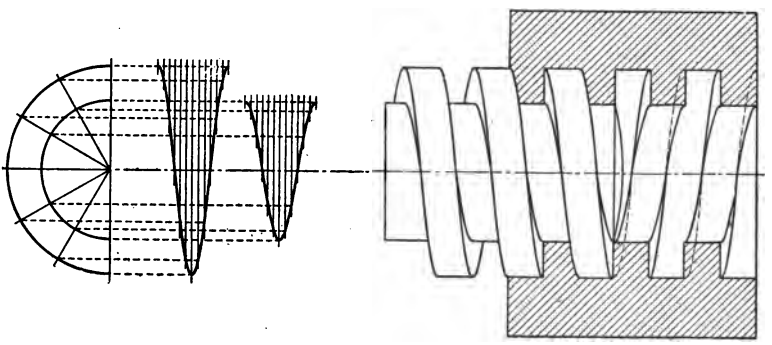

Fig. 307.—Square thread, external and internal.

ceeding, and is rarely done, then only on screws of large diameter. For ordinary practice the labor is altogether unnecessary, and the helix is conventionalized into a straight line. The square thread

screw would thus be drawn as in Fig. 308, *A* or *B*, which while not so realistic or pleasing as Fig. 307, requires very much less time.

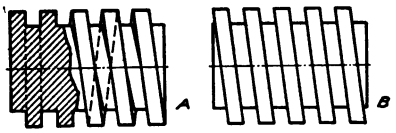

FIG. 308.—Conventional square thread.

The *V* thread would be drawn in the stages shown in Fig. 309 and should be inked in the same order.

For screws less than perhaps an inch in diameter, the thread outlines are omitted and one of the conventional forms of Fig. 310

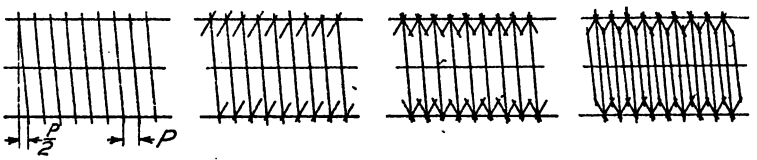

FIG. 309.—Stages in drawing V threads.

used. (*A*) is a very common convention. The lines representing the tops of the threads are drawn as before but spaced by eye. The spacings need not be to the correct pitch, but to look well should somewhat approximate it. The root lines are usually

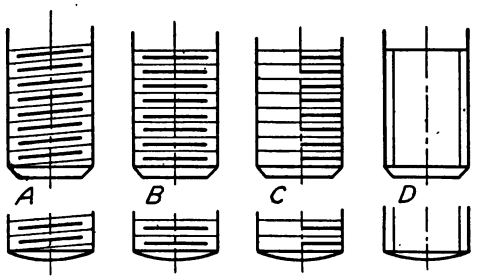

FIG. 310.—Conventional threads.

made heavier for effect. The beginners' usual mistake of exaggerating the slant must be carefully guarded against. It is a question as to whether there is any necessity of slanting the lines at all, and in much good practice they are drawn straight across

as at (*B*). (*C*) is a simpler convention, in that it requires no pencil lines for limiting the root lines, as there is always a center

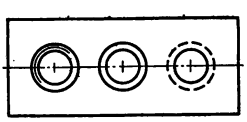

FIG. 311.

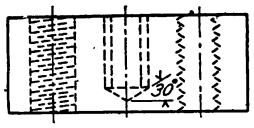

FIG. 312.

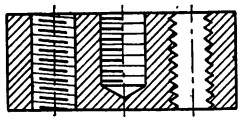

FIG. 313.

FIGS. 311, 312, 313.—Threaded holes in plan, elevation and section.

line already drawn. In this the root lines are always placed on the shade side (see page 289).

Bolt and screw ends are either rounded (with a radius of about twice the diameter) or chamfered. Lines representing threads must not be carried beyond the cylindrical part of the shaft.

Fig. 311 shows different conventional representations used for threaded holes in plan, Fig. 312 holes in elevation and Fig. 313 in section. In showing a threaded hole in section if the slant of the thread is shown at all it would evidently be reversed, as the part represented fits the invisible side of the screw. In tapped holes not extending through the piece the "drill point" or shape of the bottom of the hole (drawn at 30 degrees) should always be shown.

When two pieces screwed together are shown in section the thread shapes must be drawn, as in Fig. 314 at *A*. The same is true for a male thread in section as at *B*.

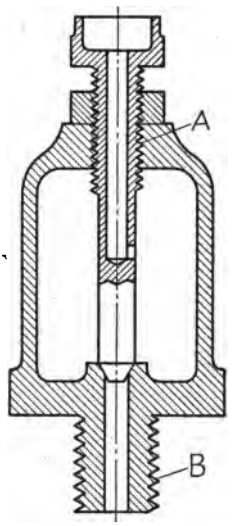

FIG. 314.—Threads in section.

It is not necessary to draw the threads on the whole length of a long screw. They may be started at each end and a note used for the space between (Fig. 315).

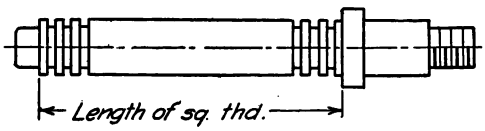

FIG. 315.—A long screw.

Bolts and Screws.—As the necessity for the representation of bolts and screws is so frequent, the standard shapes and propor-

tions must be known, so that they may be drawn without hesitation. Of the many forms used for different purposes those which occur oftenest are given here.

U. S. Standard Bolt.—The adopted sizes for hexagonal and square bolt heads and nuts apply to both chamfered and rounded forms. On page 110 the projections of the curves resulting from chamfering, *i.e.*, the intersection of a prism with a cone or sphere, were discussed. While some of the curves are actually hyperbolas and ellipses they are always drawn as circle arcs.

The diameter "across flats" (short diameter) in both hex and square forms is one and one-half times the diameter of the bolt, plus one-eighth of an inch or,

$$W = 1\tfrac{1}{2}\, d + \tfrac{1}{8}''$$

The thickness of the bolt heads is one-half this distance, or $\frac{W}{2}$, and the thickness of the nuts is equal to the diameter of the bolt.

To Draw a Bolt.—In drawing a U. S. Standard hex head bolt a simple diagram (Fig. 316) drawn first, gives all the dimensions needed for head and nut both across flats and across corners. To draw the diagram lay off on a horizontal line a length d (diameter of bolt) $+ \frac{1}{2}d + \frac{1}{8}''$ and complete with 30-degree triangle as shown. *A* in Fig. 317 shows the dimensions obtained by this diagram, and *B* and *C* their application in drawing a hex head and nut across corners, the dimensions being transferred from the diagram with dividers. *D* and *E* show the method of drawing the hex head and nut across flats. The dotted lines suggested on diagram *A* indicate its derivation from the top view of the bolt.

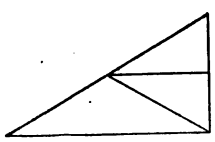

Fig. 316.

The square head bolt is drawn similarly, constructing the diagram at 45° instead of 30°, Fig. 318.

For rounded head bolts, as are used in some finished machine work the construction is the same, Fig. 319. It should be noted that the nut in this form differs from the head on account of the hole taking away the top of the sphere, the rounded end of the bolt gives the spherical effect, but the nut must be full thickness (d). A convenient radius for the sphere is $2d$.

A variation of the method described for drawing a bolt head is shown in stages in Fig. 320, where a semicircle is drawn with a

radius $R_1 = \frac{W}{2}$. For a view across flats tangents to this semicircle give the construction immediately. For a view across corners draw the semicircle and one tangent. A 30-degree line

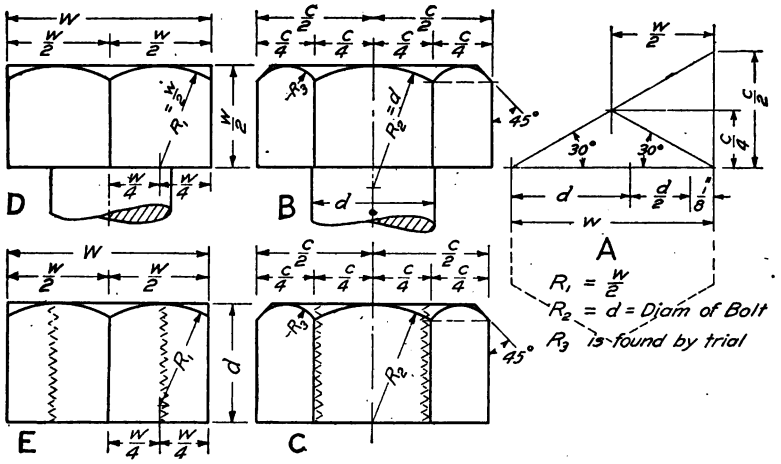

FIG. 317.—Construction of U. S. Std. hex head and nut.

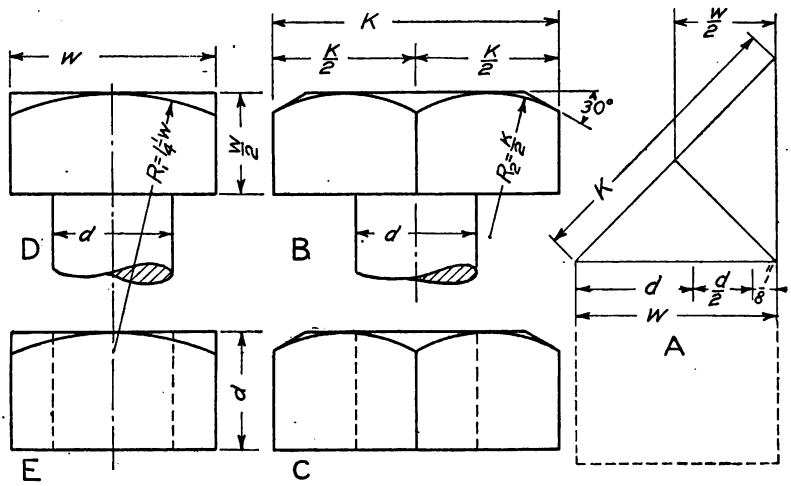

FIG. 318.—Construction of U. S. Std. square head and nut.

drawn from the center to this tangent will give the radius for another semicircle to which tangents are drawn for the outside edges. The points at which this circle cuts the top line of the

head gives the location of the inside lines. Complete chamfer curves as before.

To draw the top view of a bolt head or nut first draw a circle, representing the chamfer, of a diameter equal to the width across

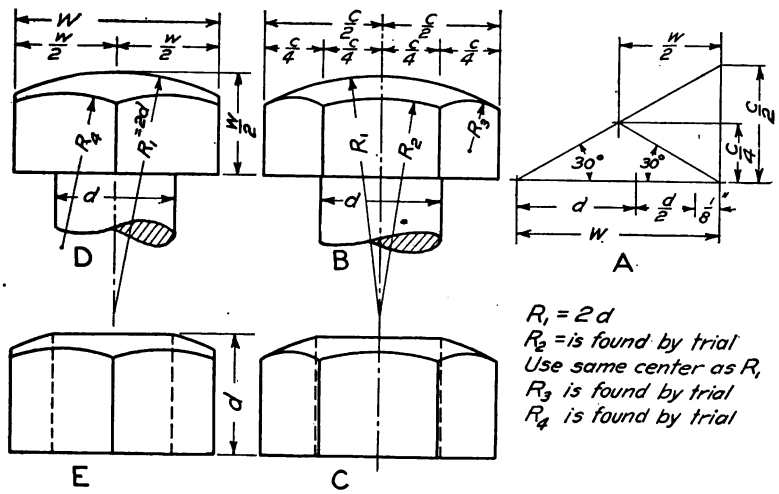

FIG. 319.—Construction of rounded hex head and nut.

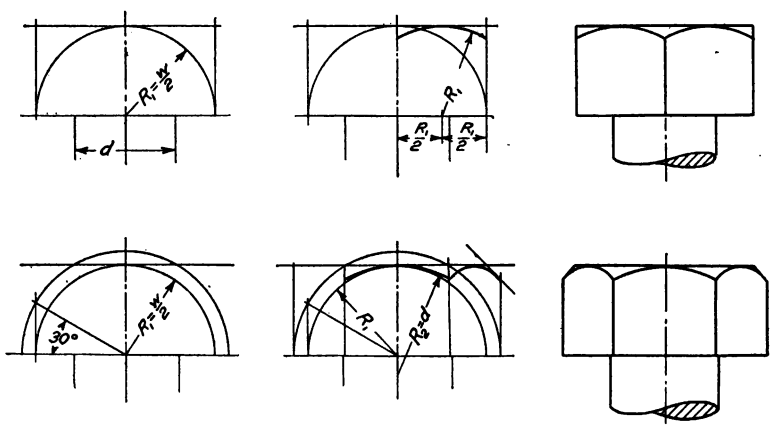

FIG. 320.—Semicircle construction.

flats. Then circumscribe the hexagon or square by drawing tangents to the circle.

Except in "show drawings" it is not customary to show end views of bolt heads or nuts in position, as for example on the

end view of a cylinder head. The holes only are shown. A table of dimensions of U. S. Standard bolts and nuts is given on page 312 (appendix).

Studs.—Studs have threads on both ends, and are used when through bolts are not suitable, for parts which must be removed frequently, such as cylinder heads. One end is screwed permanently into a tapped hole and the other end receives a nut. Fig. 321.

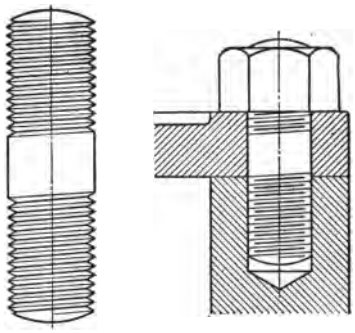

FIG. 321.—Studs.

Locknuts.—Many different locking devices to prevent nuts from working loose under vibration are used in machine design. The jam nut or checknut is a common method, Fig. 322, using two "three quarters" nuts, two standard nuts, or one full and one thin nut. Theoretically

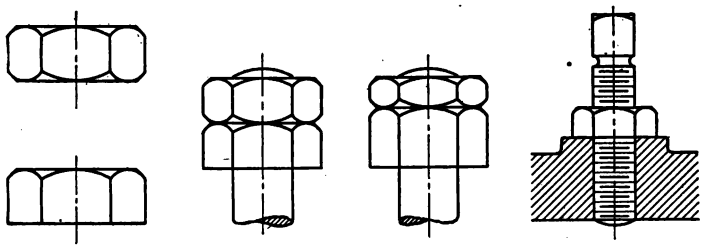

FIG. 322.—Locknuts.

the thin nut should be under but it is sometimes placed outside. Spring washers, split keys, and special nuts are all used for locking purposes.

S. A. E. Standard Bolts, Fig. 323. In automobile work the standard of the Society of Automotive Engineers has been adopted. The bolts have finer threads and smaller heads and nuts than the U. S. standard. The head is slotted for screw-driver, and to provide against loosening the "castle nut" with pin through the bolt is used. A table of sizes of S. A. E. bolts is given on page 312.

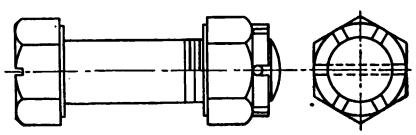

FIG. 323.—S. A. E. Std. bolt and castle nut.

Cap screws differ from bolts in that they are used for fastening two pieces together by passing through a clear hole in one and screwing into a tapped hole in the other. Their heads are of smaller diameter than standard bolts, and thicker, being equal to the diameter of the bolt. Fig. 324 shows several different

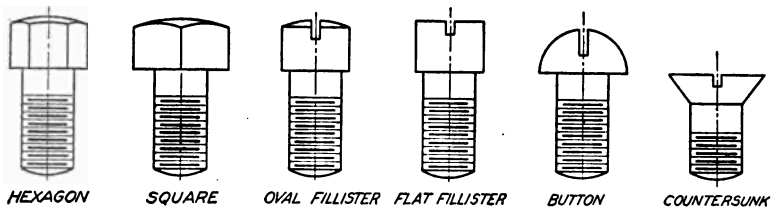

FIG. 324.—Cap screws.

forms. The hex head cap screw is used oftener than all the others together, and the usual range of sizes is from $\frac{3}{8}''$ to 1". A table of dimensions is given in the Appendix.

Machine screws are used for the same purpose as cap screws. They are specified by gage number ranging from No. 0 (.06" dia.) to No. 30 (.45"). The various forms of heads and a table of sizes are given in the Appendix.

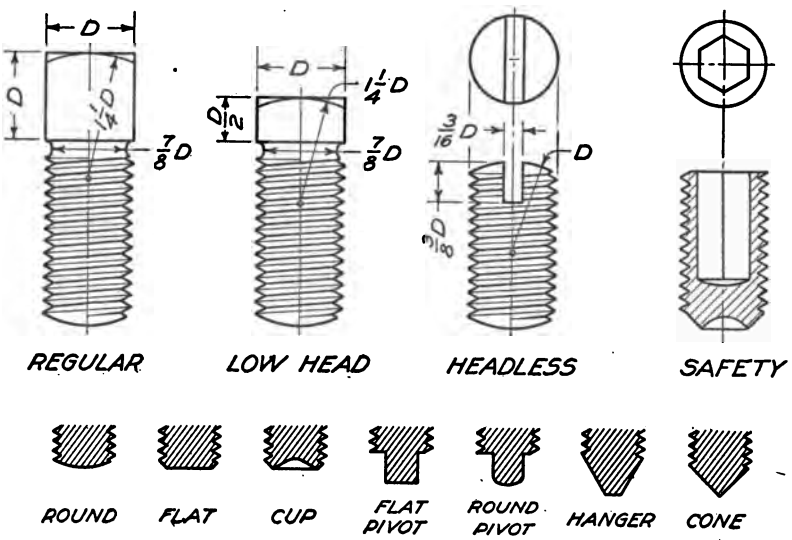

FIG. 325.—Set screws.

Set screws are used for holding two parts in relative position, being screwed through one part and having the point set against

the other. They are made regularly with square heads whose thickness and short diameter are equal to the diameter of the screw, and also in "low head" and "headless" form. Factory inspection laws are very strict regarding the use of projecting screws on moving parts, and if set screws are used, require them to be headless. Fig. 325 illustrates several forms together with various points for different purposes.

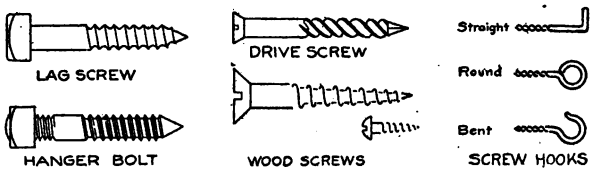

FIG. 326.—Wood screws.

Wood screws have the threads so proportioned as to conform to the relative holding strengths of wood and metal. They are usually drawn as shown in Fig. 326, which shows also a lag screw, a wood screw with bolt head used for fastening machinery to wood supports.

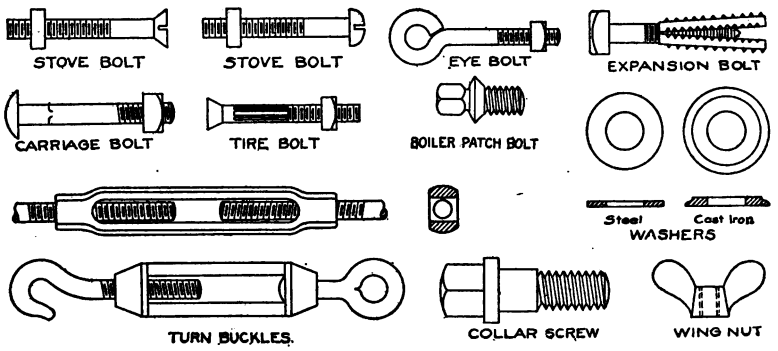

FIG. 327.—Various bolts and screws.

Fig. 327 illustrates the method of representing various other bolts and screws. For many other special forms Machinists' handbooks and other references may be consulted.

Dimensioning and Specifying Bolts and Screws.—If a thread is U. S. Std. the only dimensions given for it are the outside diameter and length. When these are given the thread is assumed to be U. S. standard right hand, and the machinist

knows the pitch, drill sizes, etc. The word "pitch" has been defined as the distance between threads. A commonly accepted meaning among machinists is the number of threads per inch, thus "8 pitch" would mean eight threads per inch. There is very little danger of misunderstanding in these two meanings but it is safer and better to say " . . . threads per in." Some practice uses a Roman numeral on the thread, as "VIII."

Bolts if standard are dimensioned or specified by giving the diameter, length under the head to edge of round end, or extremity of chamfered end, and amount of thread, Fig. 328. If special give complete information. *Studs*, give diameter, length, length of thread on each end. *Cap screws*, give diameter, length under head, length of thread. *Machine screws*, give number, length, under the head for round and fillister heads, overall for counter-sunk heads. *Set screws*, give diameter and length, under head to extreme point. *Wood screws*, give length, style of head and number. *Lag screws*, give diameter, length under head, kind of head. *Screw hooks and screw eyes*, diameter and length over all. *Boiler patch bolt*, for cup head length under head, for bevel head, length from largest diameter of bevel.

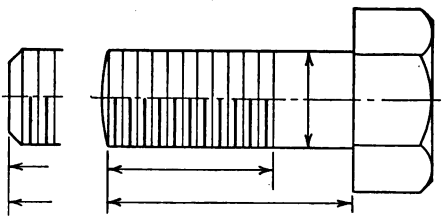

FIG. 328.—Bolt dimensioning.

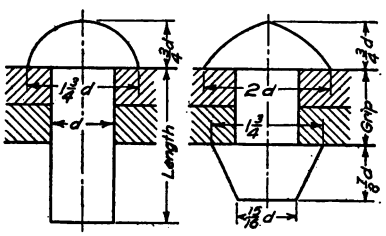

FIG. 329.—Rivets.

Rivets.—Rivets are used for making permanent fastenings, generally between pieces of sheet or rolled metal. They are round bars of steel or wrought iron with a head formed on one end and are put in place red hot so that a head may be formed on the other end by pressing or hammering. Rivet holes are punched, punched and reamed, or drilled, $\frac{1}{16}$" larger than the diameter of the rivet, and the shank of the rivet is made just long enough to give sufficient metal to fill the hole completely and make the head.

It is not within our scope to consider the design of riveted

joints, but we are concerned with the methods of representation. The two general uses of rivets are in structural steel construction, and boiler and tank work. In the former only two

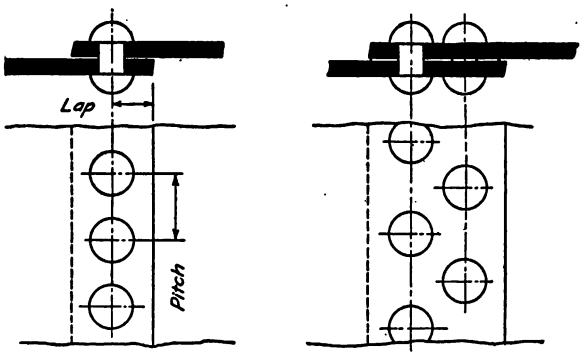

FIG. 330.—Lap joints.

kinds of heads are needed, button heads and countersunk heads. The symbols used are given on page 238.

For boiler and tank work, pressure against the head as well as shear must be considered, and the heads shown in Fig. 329 are used.

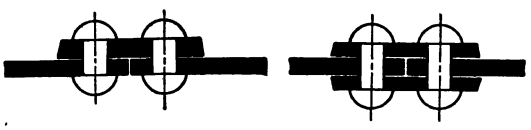

FIG. 331.—Butt joints.

Plates are connected by either *lap joints* or *butt joints*. Single- and double-riveted lap joints are illustrated in Fig. 330 and butt joints with single and double straps in Fig. 331.

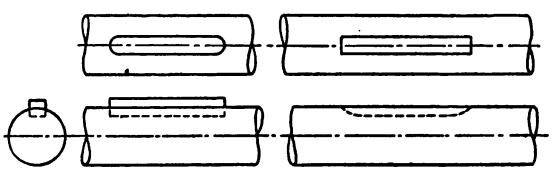

FIG. 332.—Keyways.

Keys.—In machine drawing there is frequent occasion for representing keyed fastenings, as used in securing wheels, cranks, etc., to shafts. The commonest form is the *sunk key*, Fig. 332, with keyway in shaft and hub. Its top is tapered, about $\frac{1}{8}''$

to 1 ft., while the sides are parallel. There are various rules for sizes and proportions but the following is good practice.

$$W = \tfrac{3}{16}D + \tfrac{1}{8}'', \; T = \tfrac{3}{32}D + \tfrac{1}{8}''$$

For very heavy work two or more keys are used. If two, they are usually placed 90° apart.

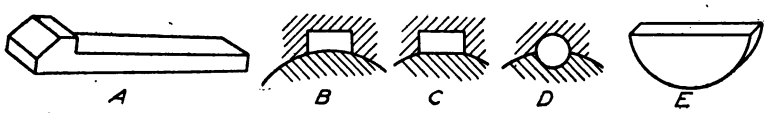

FIG. 333.—Keys.

As an aid in removal a sunk key is often made with a gib head as shown in Fig. 333 (*A*). In end views this head is not drawn, the keyway only being shown.

A feather is a straight key sometimes with gib head on each end, allowing a piece to slide lengthwise on a shaft while preventing rotation. *Saddle keys*, Fig. 333 (*B*), and *flat keys* (*C*) are used for very light work. *Pin keys* (*D*) are used at the end of a shaft, as for example in fastening a handwheel. A tapered pin (¼″ to 1 ft.) is driven into a tapered hole drilled in shaft and hub together, as deep as the length of the hub.

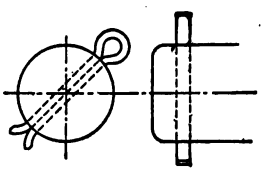

FIG. 334.—Cotter pin.

The Woodruff (or Whitney) key (*E*) is used extensively in machine tool work on shafts not over 2½″ in diameter. These are flat segmental discs, made of the same diameter as the shaft.

Spring cotters are used on bolts and shafts to prevent a nut or piece backing off. Careless drawing of such details is very common and should be guarded against. Fig. 334 shows a cotter pin in place.

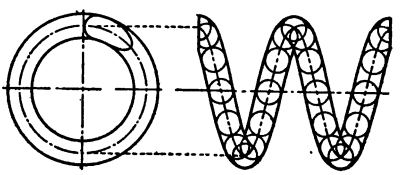

FIG. 335.—Spring, true projection.

Helical Springs.—Fig. 335 shows the method of drawing the true projection of a helical spring with round section, by constructing the helix of the center line of the section, drawing on it a number of circles of the diameter of the wire and drawing an envelope curve tangent to the circles. Usually springs are drawn with straight lines as in Fig. 336 which shows elevation and section of both conical and cylindrical helical springs.

Pipe.—Standard wrought pipe of steel or iron as commonly used is designated by its nominal inside diameter, which differs slightly from the actual inside diameter, as will be noted from the table on page 314. For heavier pressures "extra" and "double extra" heavy pipe have the same outside diameter as standard weight pipe of the same nominal size, the added thickness being on the inside. Thus the outside diameter of 1″ pipe is 1.315, the

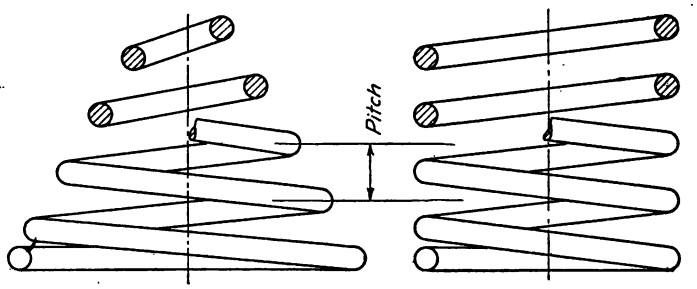

FIG. 336.—Springs, conventional.

inside diameter of standard 1″ pipe 1.05, of 1″ extra strong 0.951, and of XX, 0.587.

Pipe over 12″ in diameter is designated as O.D. pipe, and is specified by its outside diameter and the thickness of metal.

Pipe is usually threaded on the ends for the purpose of screwing into fittings and making other connections. The form of thread used is known as the Briggs Standard, illustrated in

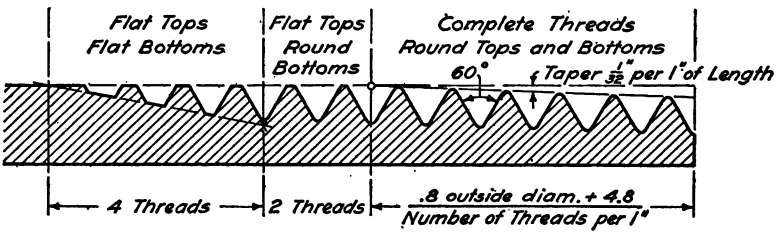

FIG. 337.—Section of Briggs pipe thread.

enlarged scale in Fig. 337. The pipe threads are cut on a taper so that the distance the pipe enters a fitting is fixed.

Pipe Fittings.—Pipe fittings are the parts used in connecting and "making up" pipe. They are usually either cast iron or malleable iron, except couplings which are wrought iron. They are designated by the nominal size of the pipe with which they are

used. For smaller sizes screwed fittings are used, Fig. 338, while for large pipe flanged fittings, Fig. 339 are preferred.

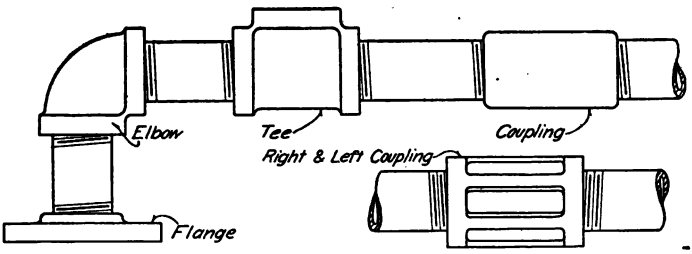

FIG. 338.—Screwed fittings.

Pipe Drawings.—When drawing piping to large scale, it is represented as in Fig. 340. The tables on page 214 will be found useful in this connection, although the dimensions of fittings vary somewhat with different manufacturers.

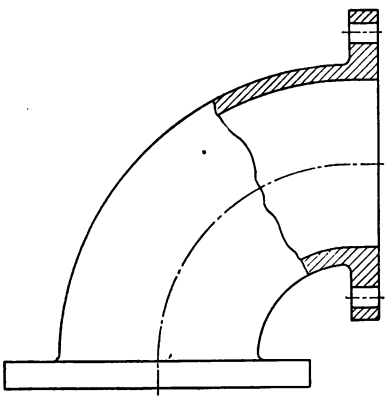

FIG. 339.—A flanged fitting.

When drawn to small scale or in sketches the conventional representations of Fig. 341 are used, with a single line for the runs of pipe no matter what the diameters may be. This single line should be made heavier than the other lines of the drawing. The arrangement of views is

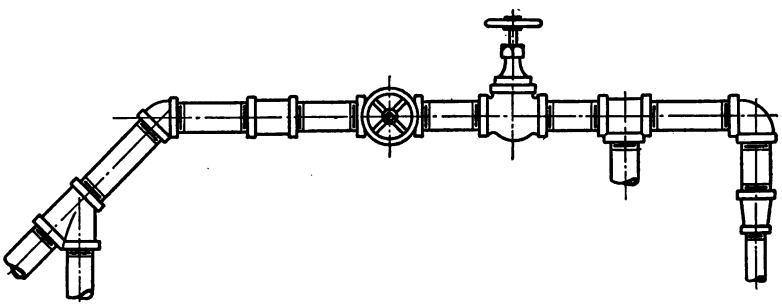

FIG. 340.—Piping—to scale.

generally in accord with orthographic projection, Fig. 342, but two other methods must be mentioned. Sometimes it will be

found convenient to swing all of the piping into one plane and make only one "developed" view, Fig. 343. Isometric and oblique drawings are often used to show in one view the position of the piping in space, either alone, or in connection with the orthographic or developed make-up drawing, Fig. 344.

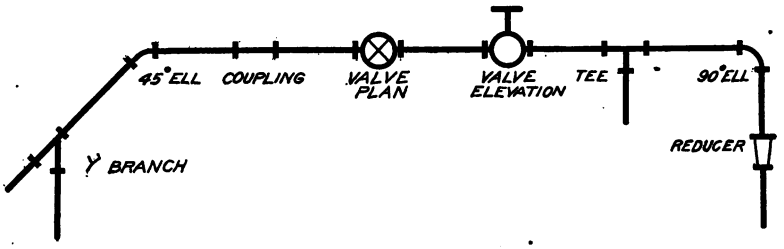

FIG. 341.—Piping—diagrammatic.

Dimensions should be given to the centers of piping, valves and fittings in order to locate them. The allowances for "make-up" can best be left to the pipe fitter. The maximum space allowed for valves when wide open and for other piping apparatus should be indicated. The size of pipe should be specified by a note

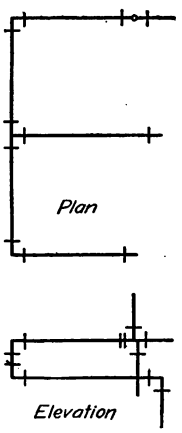

FIG. 342.

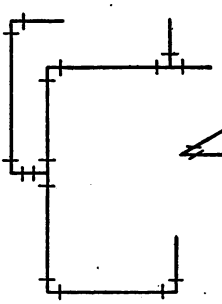

FIG. 343.

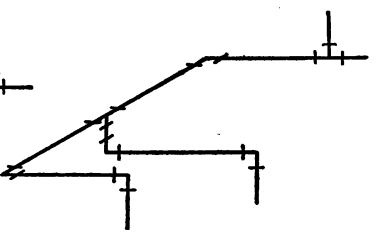

FIG. 344.

FIGS. 342, 343 and 344.—Piping in orthographic, developed and pictorial views.

telling the nominal diameter, never by a dimension line on the pipe itself.

Very complete notes are an important essential of all piping drawings and sketches.

When drawing pipe threads and threaded holes some draftsmen draw them straight, others slightly exaggerate the taper.

PROBLEMS

Group I. Helices.

1. Draw three complete turns of a cylindrical helix. Diameter 3″, pitch 1¼″.

2. Draw three complete turns of a conical helix with 1½″ pitch, whose large diameter is 4″ and small diameter 2″.

3. Draw four complete turns, two in section and two in full, of a helical spring made of ⅜″ square stock. Outside diameter 3½″, pitch 1½″.

4. Draw a helical spring 4″ long made of ½″ round stock. Diameter 2½″, pitch 1″.

Group II. Screw Threads.

5. Draw a square thread screw and section of nut. Diameter 2″, length of screw 4″. Thickness of nut, standard. Show true helix. Nut and screw separate.

6. Same as Problem 5, but with screw entering nut 2″.

7. Same as Problem 5 but for V thread with ½″ pitch.

8. Draw in section the following forms of screw threads, 1″ pitch. U. S. Std., Acme; Whitworth; Square (see Fig. 304).

9. Draw screws 1″ diameter and 2″ long as follows: Single square thread; single V thread; double V thread; left-hand single square thread. (See Figs. 306, 308, 309.)

10. Draw three conventional representations of screw threads on rods ⅝″ diameter and 1″ long. (See Fig. 310.) Draw two conventional representations of threaded holes in section, and two in elevation, depth of holes 1″.

Group III. Bolts.

11. Draw one view of a U. S. Std. hex head bolt. Diameter 1″, length 5″; length of thread 2¼″. Show hex head across corners. Leave all construction which has been used in obtaining result.

12. Same as 11, but with hex head across flats.

13. Same as 11, but square head across corners.

14. Same as 11, but square head across flats.

15. Draw two views of 1¼″ hex nut across corners and two views of same across flats.

16. Same as 15, for square nut.

Group IV. Pipe.

17. Pipe fittings (12 × 18 sheet). In the upper left-hand corner of sheet draw a 2″ tee. Plug one outlet, in another place a 1½″ × 2″ bushing, in remaining outlet use a 2″ close nipple and on it screw a 1½″ × 2″ reducing coupling. Lay out remainder of sheet so as to include the following 1½″ fittings; coupling, globe valve, R & L coupling, angle valve, 45° ell, 90° ell, 45° Y, cross, cap, 3 part union, flange union. Add extra pipe, nipples and fittings so the system will close at the reducing fitting first drawn.

18. A piping problem (12 × 18 sheet). Given two sources of pressure supply—a city main and a steam pump. A sprinkler system must have pressure on it at all times, and is to be connected so as to have city pressure, pump pressure, or pressure from an overhead tank. A battery of boilers is

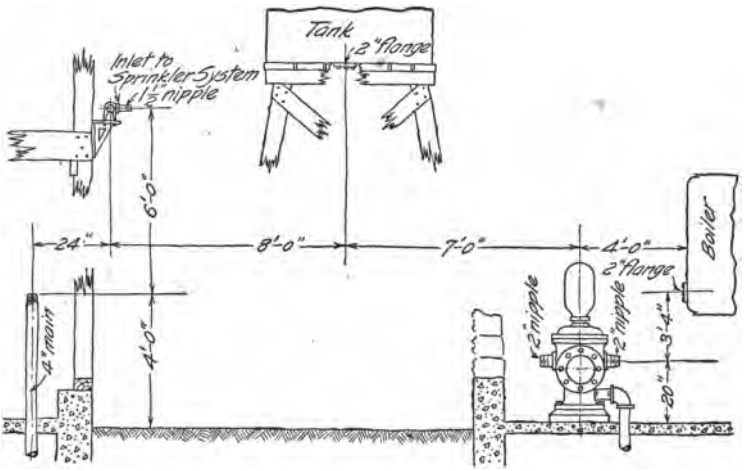

FIG. 345.—Prob. 18.

also to be connected to these three sources. The tank is to be capable of supply from either pump or main. Design a pipe layout in elevation so that each system can be operated independently, and be prefectly interchangeable, using the fewest fittings and simplest connections. Fig. 345 is a sketch showing the position of the outlets.

CHAPTER X

Working Drawings

A *working drawing* is a drawing that gives all the information necessary for the complete construction of the object represented.

It is a technical description of a machine or structure which has been designed for a certain purpose and place, and should convey all the facts regarding it so clearly and explicitly that no further instruction concerning either manufacture or erection would be required.

The drawing will thus include: (1) The full graphical representation of the shape of every part of the object. (2) The

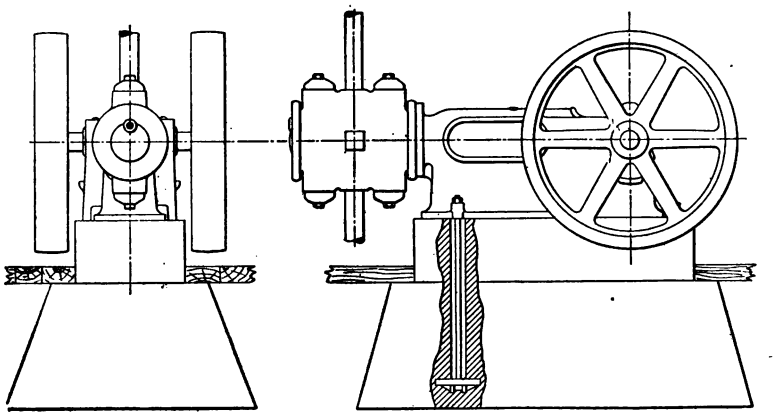

Fig. 346.—Outline assembly drawing.

figured dimensions of all parts. (3) Explanatory notes giving specifications in regard to materials, finish, etc. (4) A descriptive title.

Often, as in architectural and structural drawing, the notes of explanation and information concerning details of materials and finish are too extensive to be included on the drawings, so are made up separately in typewritten or printed form and called the *specifications*. These are considered as virtually a part of the drawings, the information in them having equal weight

and importance. Thus we have the term "drawings and specifications."

Although isometric, oblique and cabinet drawings are used to some extent in special cases, the basis of practically all working drawing is orthographic projection. Thus to represent an object completely at least two views would be necessary, often more. The only general rule would be, make as many views as are necessary to describe the object **and no more.**

Instances may occur in which the third dimension is so well understood as to make one view sufficient, as for example in the drawing of a shaft or bolt. In other cases perhaps a half-dozen views might be required to show the piece completely. Some thought will be involved as to what views will show the object to the best advantage; whether an auxiliary view or note will save one or more other views, or whether a section will better explain the construction than an exterior view. One statement may be made with the force of a rule—*If anything in clearness may be gained by the violation of any one of the strict principles of projection, violate it.*

There is no guide but the draftsman's judgment as to when added clearness might result by disregarding a theoretical principle, but numerous examples will be found in this chapter illustrating the application of the statement.

Classes of Working Drawings.—Working drawings may be divided into two general classes, assembly drawings and detail drawings.

An assembly drawing is, as its name implies, a drawing of the machine or structure put together, showing the relative position of the different parts. The term "general drawing" is sometimes used.

Under the term *assembly drawings* would be included preliminary design drawings and layouts, piping plans, and final complete drawings used for assembling or erecting the machine or structure.

The *design drawing* is the preliminary layout, full size if possible, on which the scheming, inventing and designing is worked out accurately, after freehand sketches and calculations have determined the general ideas. From it the detail drawings of each piece are made.

The Assembly Drawing.—The design drawing is in some cases finished and traced to form the assembly drawing. Oftener the

assembly drawing is drawn from it, perhaps to smaller scale to fit a standard sheet, and using the detail drawings to work from. This makes a valuable check on the correctness of the detail drawings.

The assembly drawing will give the over-all dimensions, the distances from center to center, or from part to part of the different pieces, indicating their location and relation, so that the machine can be erected by reference to it. It should not be overloaded with detail, particularly invisible detail. Unnecessary hidden lines should not be used on any drawing.

Assembly drawings often have reference letters or numbers on the different parts, sometimes enclosed in circles, referring to the

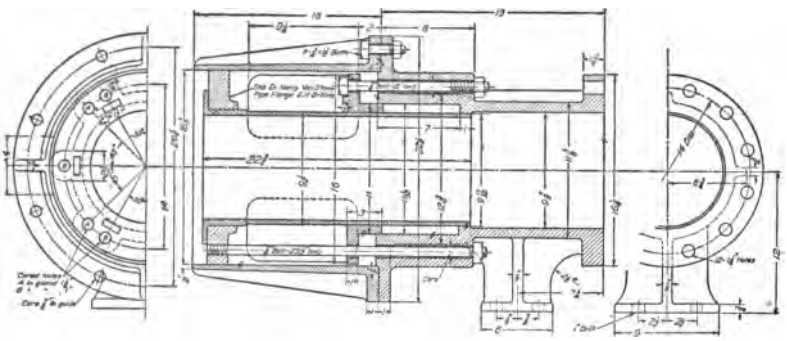

FIG. 347.—Assembly working drawing.

details and bill of material. The term "diagram drawing" is applied to this class of assembly drawings, as well as to those made to show piping, wiring, heating, etc.

An *outline assembly drawing* is used to give a general idea of a machine or structure, and contains only the principal dimensions. When made for catalogue or other illustrative purposes, dimensions are often omitted, Fig. 346. Shade lines are generally used on this class of drawings, and sometimes line shading.

An *assembly working drawing*, showing fully the construction of each piece as well as the relative positions, may be made for a simple machine, Fig. 347, and sometimes "part assembly" drawings of certain groups of parts are used instead of separated details of each part.

A detail drawing is the drawing of a separate piece, giving a complete and exact description of its form, dimensions and construction. A successful detail drawing will tell the workman

simply and *directly* the shape, size, material and finish of each part, what shop operations are necessary, what limits of accuracy must be observed, and how many of each are wanted. Fig. 348 is a detail drawing of a small piece, illustrating the use of decimal dimensions.

The *grouping* of the details is entirely dependent upon the requirements of the shop system. In a very simple machine and if only one or two are to be built, all the details may perhaps be grouped on a single sheet. If many are to be built from the same design, each piece may have a separate sheet. In general,

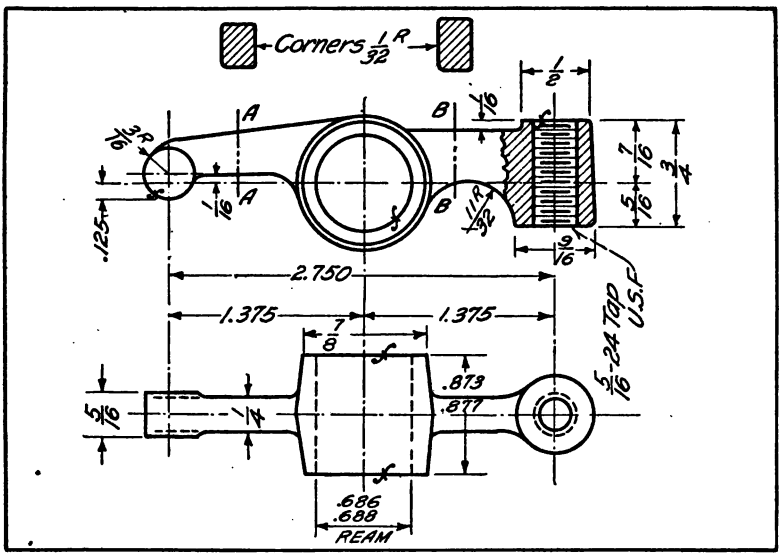

FIG. 348.—Detail drawing.

it is a good plan to group the parts of the same material or character. Thus forgings may be grouped on one sheet, bolts and screws on another.

A complete *set* of working drawings therefore consists of assembly sheets, and detail sheets for each of the classes of workmen, as the patternmaker, blacksmith, machinist, etc. These special drawings need not include dimensions not needed by those trades. The set may include also drawings for the purchaser.

There is a "*style*" in drawing, just as there is in literature, which in one way indicates itself by the ease of reading. Some drawings "stand out," while others which may contain all the

information are difficult to decipher. Although dealing with "mechanical thought," there is a place for some artistic sense in mechanical drawing. The number, selection, and disposition of views, the omission of anything unnecessary, ambiguous, or misleading, the size and placing of dimensions and lettering, and the contrast of lines are all elements concerned in the *style*.

The diagram, Fig. 349, attempts to illustrate graphically the different steps in the production of the drawings for a proposed machine or structure.

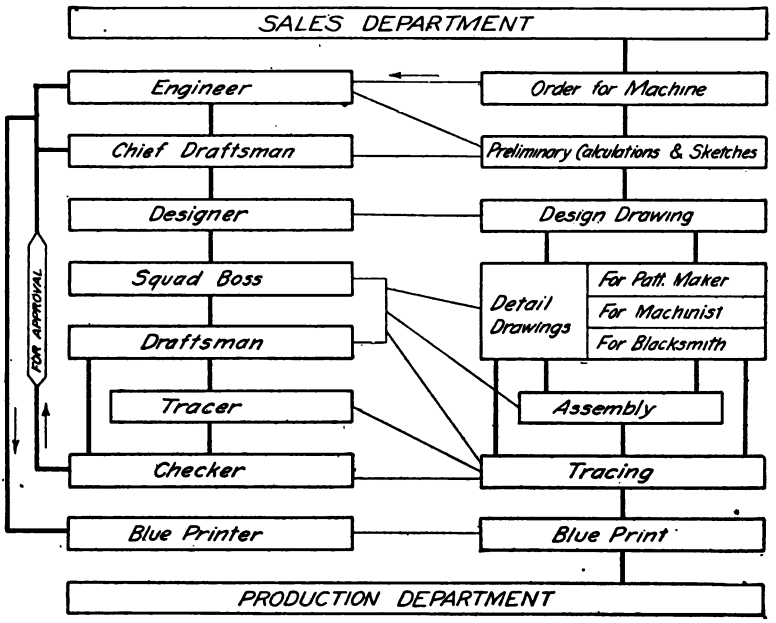

FIG. 349.—The source and path of a drawing.

Making a Working Drawing.—Order of Penciling.—After the scheming, inventing and calculating has been done, the order of procedure would be: *First*, lay off a sheet to standard size, and block out space for the title. *Second*, decide what scale is to be used, choosing one large enough to show all dimensions without crowding, and plan the arrangement of the sheet by making a little preliminary freehand sketch, estimating the space each view will occupy, and placing the views to the best advantage for preserving if possible a balance in the appearance of the sheet. *Third*, draw the center lines for each view and on these "block in"

the views by laying off the principal dimensions and outlines. Center lines are drawn for the axes of symmetry of all symmetrical views or parts of views. Thus every cylindrical part would have a center line through its axis. Every circle would have two center lines intersecting at its center. *Fourth*, finish the projections, putting in minor details, such as fillets, rounded corners,

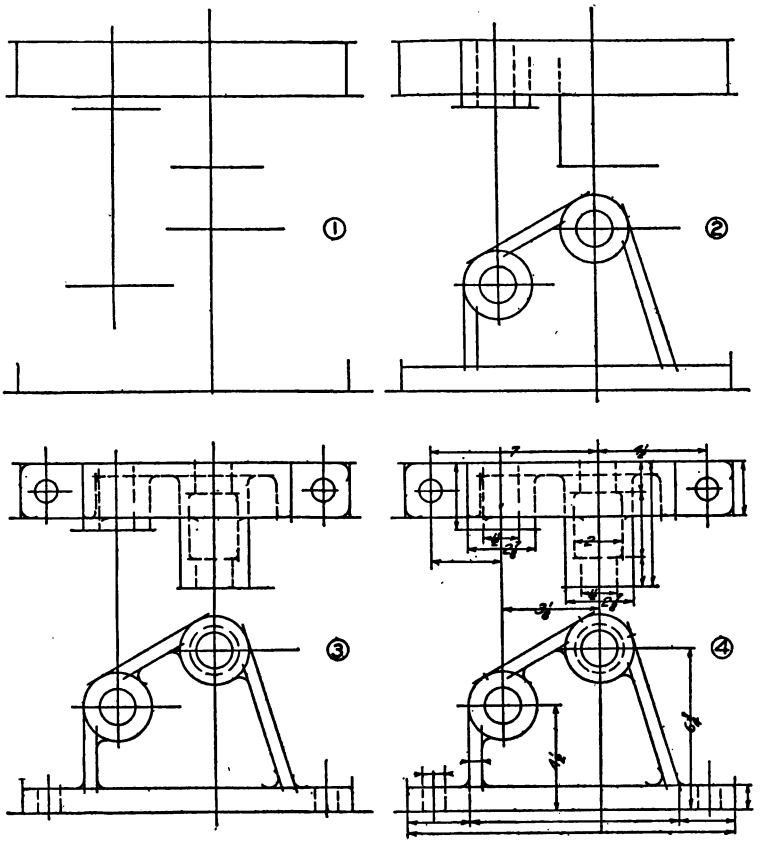

FIG. 350.—Order of penciling.

etc., last. In Chapter VI the general principle was given that the view showing the characteristic shape should be made first. The different projections should however be carried on together and no attempt made to finish one view before starting another. *Fifth*, draw all necessary dimension lines, then put in the dimensions. *Sixth*, lay out the title. *Seventh*, check the drawing carefully.

As an aid in tracing, the finished outline or parts of it may if necessary be brightened by running over a second time with the pencil. The overlapping and overextending lines of the constructive stage should not be erased before inking. These extensions are often convenient in showing the stopping points. All unnecessary erasing should be avoided as it abrades the surface of the paper so that dirt catches more readily.

As an aid in stopping tangent arcs in inking it is often desirable on the pencil drawing to mark the tangent point by a short piece of the normal at the point of tangency. Fig. 350 illustrates the stages of penciling.

Tracing.—Working drawings almost always go to the shop in the form of blue prints, generally printed from tracings made on tracing cloth, although often drawings are made on bond paper or other translucent paper and prints made directly from the pencil drawing. The beginner should read carefully pages 278 and 279 before starting a tracing, noticing that the cloth is to be tacked down smoothly with the dull side up, prepared by chalking, and the selvage torn off. Also that no view should be left over night with only part of its lines traced.

Order of Inking.—*First*, ink center lines, *Second*, ink all circles, beginning with the smallest, then circle arcs. *Third*, ink any irregular curved lines. *Fourth*, ink straight full lines in the order, horizontal, vertical, inclined. *Fifth*, ink dotted circles, arcs, and lines. *Sixth*, ink extension and dimension lines. *Seventh*, ink arrow heads and dimensions. *Eighth*, section line all cut surfaces. *Ninth*, letter notes and title. *Tenth*, ink the border. *Eleventh*, check the tracing. Fig. 351 shows the stages of inking.

Dimensioning.—After the correct representation of the object by its projections, *i.e.*, telling its *shape*, the entire value of the drawing as a working drawing lies in the dimensioning, *i.e.*, telling its *size*. Here our study of drawing as a language must be supplemented by a knowledge of the shop methods which will enter into the construction. The draftsman to be successful must have an intimate knowledge of pattern making, forging, sheet metal working and machine shop practice.

The dimensions put on a drawing are not those which were used in making it, but those necessary and most convenient for the workman who is to make the piece. The draftsman must thus put himself in the place of pattern maker, blacksmith or machinist, and mentally construct the object represented, to see if it can

be cast or forged or machined practically and economically, and what dimensions would give the required information in the best way. In brief, the drawing must be made with careful thought of its purpose.

The dimension lines should all be drawn first, beginning with the view which shows the characteristic shape of the piece, being

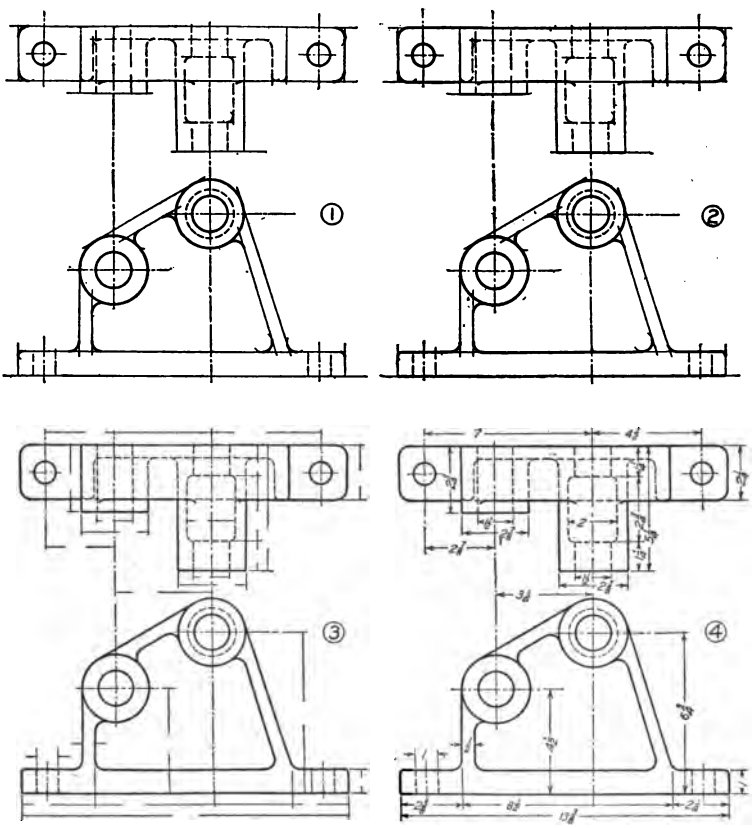

FIG. 351.—Order of inking.

careful not to crowd them (it is generally possible to keep dimension lines at least three-sixteenths of an inch away from the lines of the drawing), and always bearing in mind the convenience and ease of reading the drawing. Thus related dimensions should be given on the same view, as for example the diameter and length of a cylinder, as in Fig. 351. The dimensions should then be found for each distance indicated, by scaling or computation or both.

General Rules for Dimensioning.—In the alphabet of lines in Fig. 48 the dimension line was shown as a fine full line, with long arrow heads whose extremities indicate exactly the points to which the dimension is taken, and having a space left for the figure. The shape of the arrow head must be observed carefully. Fig. 352. Some practice uses a dash line and some a red line for dimension lines. It is common practice among structural draftsmen to place the dimension above the continuous line but it is not recommended for machine or architectural work.

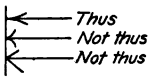

FIG. 352.

1. Dimensions, of course, always indicate the finished size of the actual piece, without any reference to the scale of the drawings.

2. Dimensions should read from the bottom and right side of the sheet, no matter what part of the sheet they are on.

3. Dimensions up to 24″ should always be given in inches. An exception is again noted in structural practice. Over 24″ practice varies, but the majority use feet and inches. The sizes of wheels, gears, pulleys and cylinder bores, the stroke of pistons and the length of wheel bases are always given in inches; and sheet metal work is usually dimensioned in inches.

4. Feet and inches are indicated thus, 5′–6″ or 5 ft.–6″. When there are no inches it should be indicated as 5′–0″, 5′–0½″. When dimensions are all in inches the inch mark is often omitted from all the dimensions, as in Fig. 353.

5. Fractions must be made with a horizontal line, as $2\frac{1}{2}$, $3\frac{1}{16}$.

6. Have figures large enough to be easily legible. In an effort for neatness the beginner often gets them too small.

7. Dimensions should generally be placed between views.

8. In general do not repeat dimensions unless there is special reason for it.

9. Preferably keep dimensions outside the view, unless added clearness, simplicity and ease of reading will result from placing them inside. (See Fig. 353.) They should for appearance' sake be kept off the cut surfaces of sections. When necessary to be placed there, the section lining is omitted around the numbers.

10. Extension lines should not touch the outline.

11. In general give dimensions from or about center lines. Remember that rough castings will vary in size and do not locate drilled holes from the edges of unfinished surfaces.

12. In finished work two edges at right angles may be taken as base lines and all dimensions given from these lines. This method is used in die work and other precision work. The jig plate, Fig. 354 is an example.

13. If it is practicable to locate a point by dimensioning from two center lines do not give an angular dimension.

14. Never use any center line as a dimension line.

15. Never put a dimension on a line of the drawing.

16. A dimension not agreeing with the scaled distance or which has been

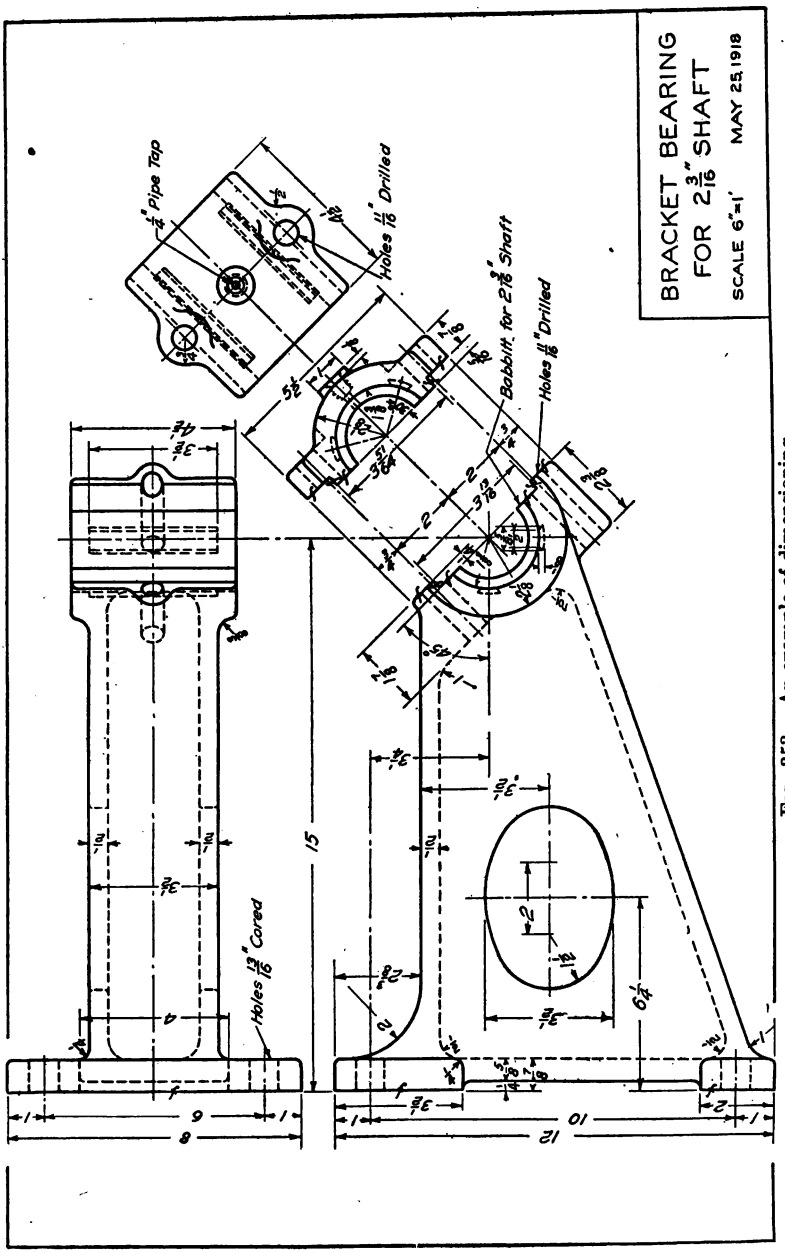

FIG. 353.—An example of dimensioning.

changed after the drawing has been made should be heavily underscored or indicated as in Fig. 355.

17. The diameter of a circle should be given, not the radius.

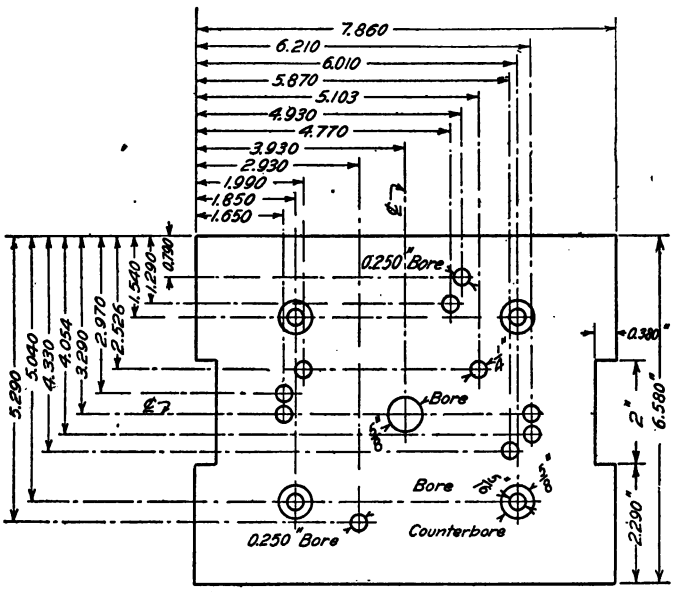

FIG. 354.—Base line dimensioning.

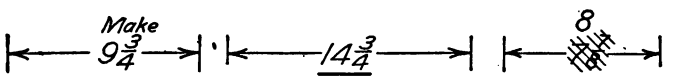

FIG. 355.—Revised dimensions.

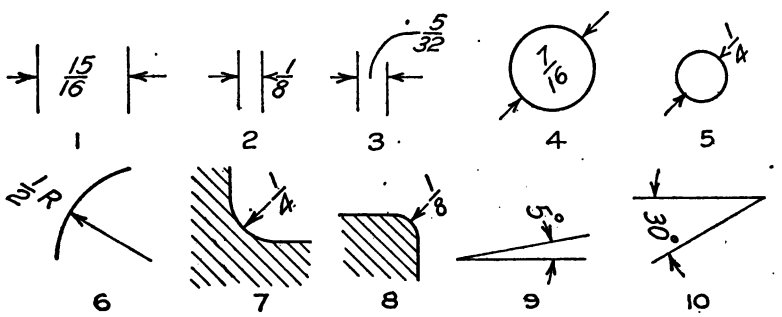

FIG. 356.—Dimensioning in limited space.

18. Radii of arcs should be marked R or Rad.

19. Have dimensions so complete that the workman will not have to add or subtract figures, in order to find an essential dimension.

20. Never give dimensions to the edge of a circular part but always from center to center.

21. The diameter of the "bolt circle" of holes in circular flanges is given, with the number and size of holes.

22. A number of dimensions in a row may be either continuous or staggered.

23. Dimensions must never be crowded. If the space is small methods as illustrated in Fig. 356 may be used.

24. The direction in which a section is taken should be indicated by arrows on the line representing the cutting plane, Fig. 357.

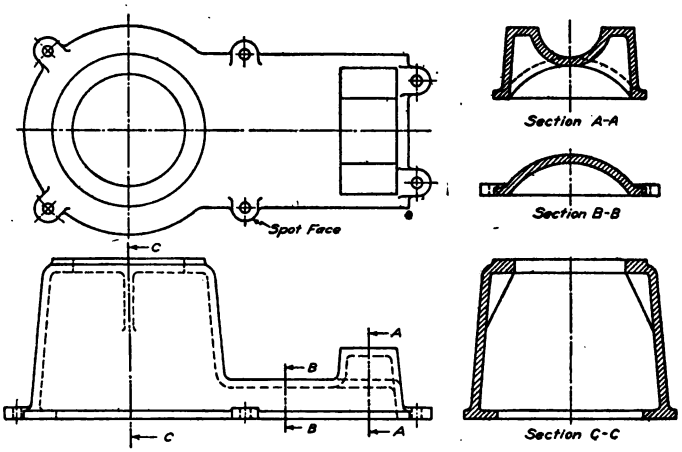

FIG. 357.—Indication of cutting planes.

The Finish Mark.—Several methods are used for indicating that certain surfaces of metal parts are to be machined, and that allowance must therefore be made on the casting or forging for finish. The symbol in common use is a small "*f*" placed on the surface, on the views which show the surface as a line. If the piece is to be finished all over, the note "*fin. all over*" is placed under it, and the marks on the drawing omitted.

Some elaborate symbols for different kinds of finish have been devised, but it is much better to specify these in words, as "*spot face*," "*grind*," etc.

Limits and Fits.—In dimensioning any working drawing the question of relative accuracy is confronted, and the draftsman's knowledge of shop practice is concerned. In the ordinary dimensioning for surfaces to be machined, American practice works to inches and sixteenths, so the usual dimensions are in fractions $\frac{1}{2}$, $\frac{1}{4}$, $\frac{1}{8}$, $\frac{1}{16}$, $\frac{1}{32}$, $\frac{1}{64}$. When closely fitting parts are to

be dimensioned the former practice was to mark both parts with the same dimension and add a note such as "drive fit," "running fit," "loose fit," "shrink fit," etc., leaving the amount of allowance to the machine shop. In present practice, with the demand for interchangeability and quantity production the exact size in decimals is specified for "essential dimensions," with the amount of "tolerance" over and under that will be allowed. For example in Fig. 358 the dimension $0.3372 - 0.000 + 0.004$ means that the distance must not be under 0.3372 but may be up to 0.004 over. These limits are set by the engi-

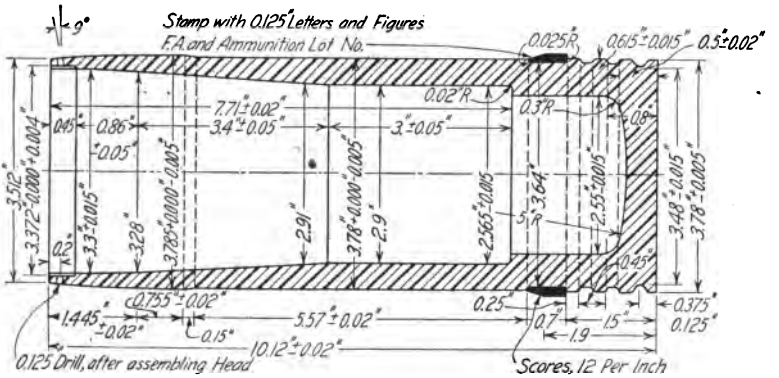

FIG. 358.—Limit dimensioning (from shrapnel drawing).

neering department and the shop follows orders explicitly. The "+" limit is usually placed over the "−" limit as in Fig. 442. The general tolerance is often stated in a note near the title as in Fig. 362. If a size need be only approximate the sign ± is placed after the numeral.

The Metric System.—Knowledge of the metric system will be of advantage as it will be encountered on drawings from countries where this system is the standard, and in occasional instances in the United States (*e.g.*, ball bearings are dimensioned in the metric system). Drawings in the metric system are not made to half-size or quarter-size. The first scale smaller than full size is one-fifth size, then one-tenth size. The unit of measurement on drawings is the millimeter (mm.) and the figures are all understood to be millimeters, without any indicating mark. Fig. 359 is an example of mm. dimensioning. A table of metric equivalents is given on page 315.

Notes and Specifications.—Some necessary information cannot be drawn and hence must be added in the form of notes. This would include the number required of each piece, the kind of material, kind of finish, kind of fit, and any other specifications as to its construction or use. Such special notes are lettered near the part referred to. General notes referring to the entire machine, or all the drawings on one sheet, are collected and lettered in one place.

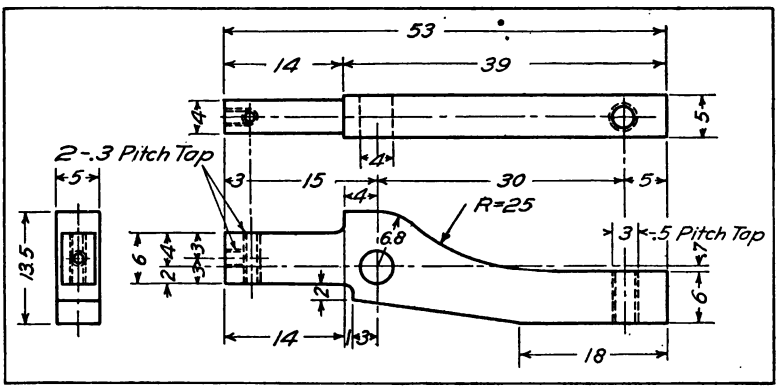

FIG. 359.—A metric drawing.

Do not be afraid of putting notes on drawings. Supplement the graphic language by the English language whenever added information can be conveyed, but be careful to word it so clearly that the meaning cannot possibly be misunderstood.

If a note as to the shape of a piece will save making a view without sacrificing clearness, use it. If two pieces are alike but one "right-hand" and the other "left-hand," one only is drawn and a note added one-R.H., one-L.H.

Standard bolts and screws are not detailed when specified in the bill of materials. Standard tapers are indicated by number. See Appendix.

The bill of material is a tabulated statement placed on a drawing, or in some cases, for convenience, on a separate sheet, which gives the mark, name, number wanted, size, material, pattern number, and sometimes the weight of each piece. A final column is usually left for "remarks."

Fig. 360 is a detail drawing illustrating the use of the bill of material.

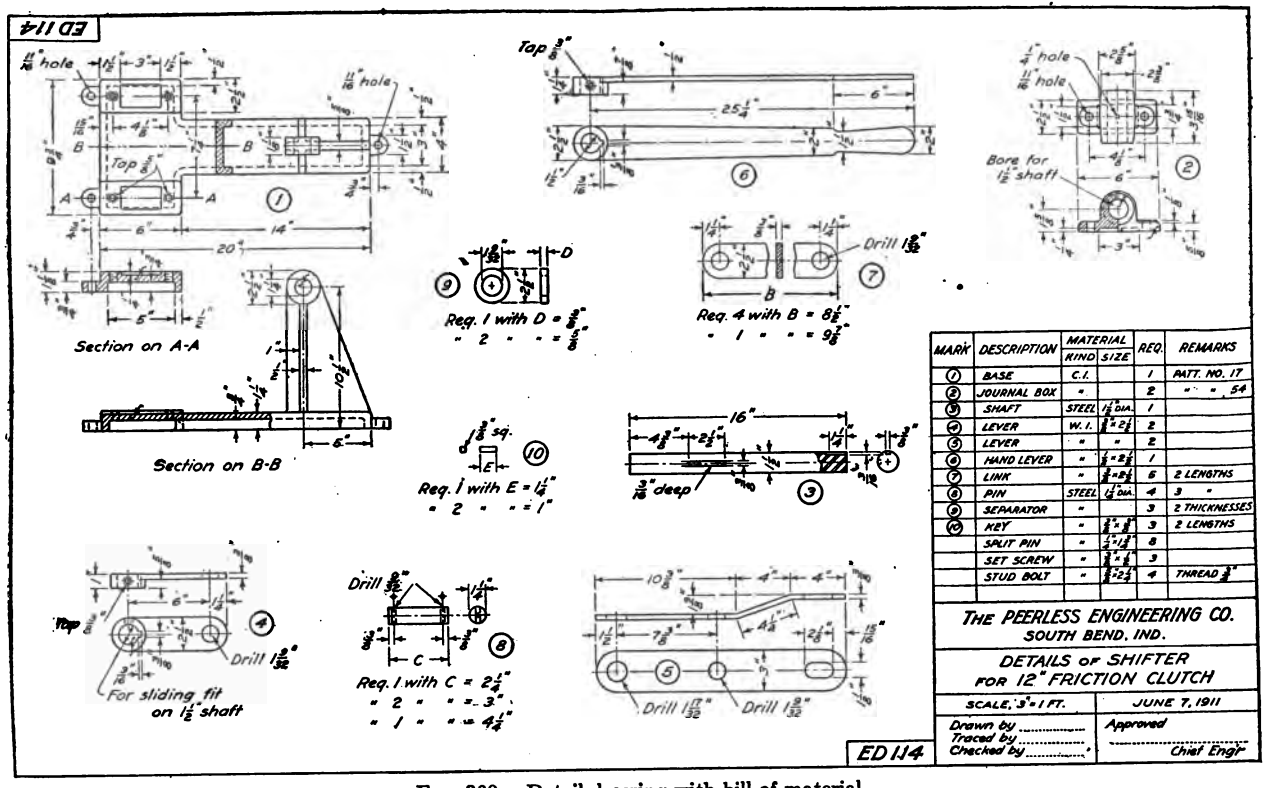

MARK	DESCRIPTION	MATERIAL KIND	MATERIAL SIZE	REQ.	REMARKS
1	BASE	C.I.		1	PATT. NO. 17
2	JOURNAL BOX	"		2	" " 54
3	SHAFT	STEEL	1 1/2" DIA.	1	
4	LEVER	W.I.	3/4" × 2 1/2"	2	
5	LEVER	"	"	2	
6	HAND LEVER	"	1/2" × 2 1/2"	1	
7	LINK	"	3/8" × 2 1/2"	6	2 LENGTHS
8	PIN	STEEL	1 1/4" DIA.	4	3 "
9	SEPARATOR	"		3	2 THICKNESSES
10	KEY	"	3/4" × 3/8"	3	2 LENGTHS
	SPLIT PIN	"	1/4" × 1 1/2"	8	
	SET SCREW	"	3/8" × 3/8"	3	
	STUD BOLT	"	3/8" × 2 1/2"	4	THREAD 3/8"

Fig. 360.—Detail drawing with bill of material.

With large parts a column giving the over-all dimensions of the piece when crated or boxed for shipping is sometimes added, particularly in manufactures for foreign shipment.

Title.—The title of a working drawing is usually boxed in the lower right-hand corner, the size of the space varying with the size of the drawing. For 12″ × 18″ sheets the space reserved may be about three inches long. For 18″ × 24″ sheets four or four and a half, and for 24″ × 36″ sheets five or five and a half inches.

A form of title which is growing in favor is the *record strip*, a strip marked off entirely across the lower part of the sheet, containing the information required in the title, and ample space for the record of orders, changes, etc., Fig. 361 illustrates this form.

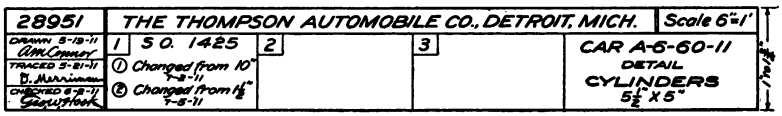

FIG. 361.—Record strip title.

It is sometimes desired to keep records of orders and other private information on the tracing, but not have them appear on the print. In such case both the corner title and record strip are used and the record strip trimmed off the print before sending it out.

Contents of Title.—In general the title of a machine drawing should contain:

1. Name of machine.
2. General name of parts (or simply "details").
3. Name of purchaser, if special machine.
4. Manufacturer; company or firm name and address.
5. Date; usually date of completion of tracing.
6. Scale or scales; desirable on general drawings, often omitted from fully dimensioned detail drawings.
7. Drafting room record; names, initials or marks of the draftsman, tracer, checker, approval of chief draftsman, engineer or superintendent.
8. Numbers; of the drawing, of the order. The filing number is often repeated in the upper left-hand corner upside down, for convenience in case the drawing should be reversed in the drawer.

The title should be lettered freehand in single-stroke capitals either upright or inclined, but not both styles in the same title. These letters and their composition have been discussed in Chapter V.

Any revision or change in the drawing should be noted, with date, in the title or record strip.

Every drafting room has its own standard form for title. In large offices this is often printed in type on the tracing cloth. Fig. 362 is a characteristic example.

FIRST USED ON	ALLOWABLE VARIATION ON DIMENSIONS LOCATING FINISHED SURFACES IS PLUS OR MINUS .005 UNLESS OTHERWISE SPECIFIED.		
MATERIAL	THE DOMESTIC ENGINEERING COMPANY		
MAT. SPEC.	DAYTON - DELCO - LIGHT OHIO		
HEAT TREAT	DATE		SCALE
HARDNESS	DRAWN BY	APPROVED	
FINISH	TRACED BY		NO.

FIG. 362.—Printed title.

CHECKING.—Before being sent to the shop, a working drawing must be checked for errors and omissions by an experienced checker, who in signing his name to it becomes responsible for any inaccuracy. This is the final "proof reading" and cannot be done by the one who has made the drawing nearly so well as by another person. In small offices all the work is checked by the chief draftsman, and draftsmen sometimes check each other's work; in large drafting rooms one or more checkers who devote all their time to this kind of work are employed.

Students may gain experience in this work by being assigned to check other students' work.

To be effective, checking must be done in an absolutely systematic way, and with thorough concentration.

Professor Follows in his "Dictionary of Mechanical Drawing" has specified admirably the work of checking, in twelve items, which are given with his permission. Each of these should be followed through separately, allowing nothing to distract the attention from it. As each dimension or feature is verified a checkmark should be placed above it or under it.

1. Put yourself in the position of those who are to read the drawing and find out if it is easy to read and tells a straight story. Always do this before checking any individual features; in other words, before you have had time to become accustomed to the contents.

2. See that each piece is correctly illustrated and that all necessary views are shown, but none that are not necessary.

3. Check all the dimensions by scaling, and, where advisable, by calculation also.

4. See that dimensions for the shop are given as required by the shop, that is, that the shop is not left to do any adding or subtracting in order to get a needed dimension.

5. Go over each piece and see that finishes are properly specified.

6 See that every specification of material is correct and that all necessary ones are given.

7. Look out for "interferences." This means check each detail with the parts that will be adjacent to it in the assembled machine and see that proper clearances have been allowed.

8. When checking for clearances in connection with a mechanical movement, lay out the movement to scale, figure the principal angles of motion and see that proper clearances are maintained in all positions.

9. See that all the small details, as screws, bolts, pins, keys, rivets, etc., are standard and that, where possible, stock sizes have been used.

10. Check every feature of the record strip.

11. Review the drawing in its entirety in connection with any points that have suggested themselves during the above checking.

12. Bearing in mind the value of explanatory notes, do not fail to add such notes as your experience tells you will increase the efficiency of the drawing.

Sections.—Sectional views are used whenever the interior construction can be shown to better advantage than in an exterior view. The principle of sectional views was explained on page 85, and the usual rules of projection are generally followed. In using sections several points should be remembered.

1. The cutting plane need not be continuous, Fig. 162.

2. Shafts, bolts, nuts, rods, rivets, keys, and the like whose axes occur in the plane of the section have no interior parts to be shown and consequently are left in full and not sectioned. Fig. 363.

3. On drawings to be inked or traced the section lining is usually only indicated freehand, and is inked with fine lines generally at 45 degrees, spaced uniformly by eye to give an even tint, the spacing governed by the size of the piece, but except in very small drawings not finer than $\frac{1}{16}''$ apart.

4. Adjacent pieces are section lined in opposite directions and are often brought out more clearly by varying the pitch using closer spacing for smaller pieces. The same piece in different views or in different parts of the same view should always be sectioned in the same way.

5. Revolved sections and broken-out sections are very convenient methods of showing the shapes of some particular detail. See Fig. 360.

6. Extra sectional views placed near the part represented may

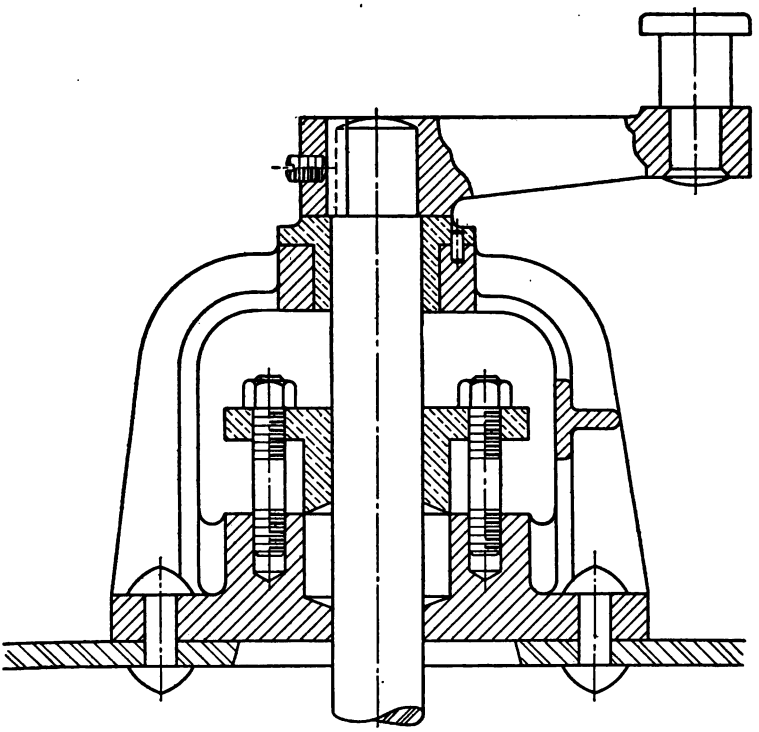

FIG. 363.—Section study.

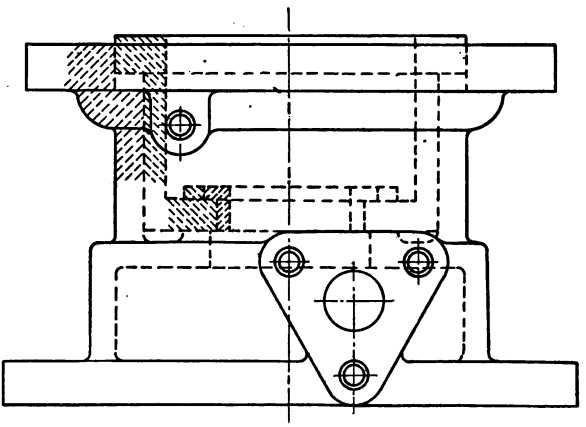

FIG. 364.—Dotted section.

often be used to advantage to show some detail of construction, Fig. 360.

7. A combination full and sectional view known as a "dotted section" will sometimes show the construction of an object economically, Fig. 364.

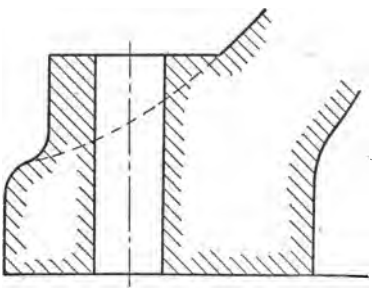

FIG. 365.—Outline sectioning.

8. Large surfaces in section are sometimes sectioned only around the edge as illustrated by the partial view, Fig. 365.

9. A "half section" is a common and economical way of showing a piece symmetrical about an axis. In such a view dotted lines are unnecessary on either side. Fig. 366.

10. Confusion in reading a complicated piece sometimes occurs if all the detail behind the cutting plane is drawn. To insure clearness such detail not required in explaining the object may be omitted. Fig. 367.

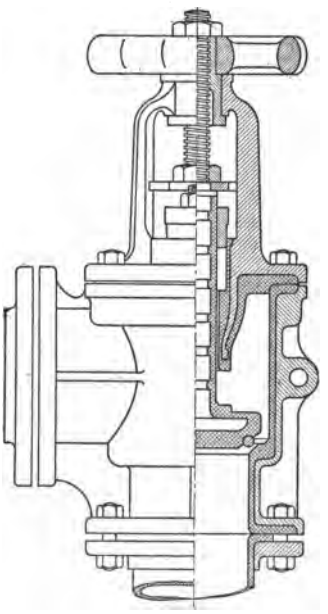

FIG. 366.—Half-section.

Violations of Theory.—The statement was made that in the interest of clearness the strict principles of projection might be violated. This is often done in making sectional views, as in Fig. 368. The true projection of a section of the valve seat is unsymmetrical and misleading, therefore not good practical drawing. The preferred form is shown below.

Similarly, if a section is taken through the rib of a machine part and drawn as a true section the effect is heavy and misleading. The draftsman's usual method is to omit the section lines from the rib, as if the cutting plane were just in front of it, Fig. 369. Another method sometimes used to good advantage, is to omit alternate section lines on the rib as in the lower section of Fig. 370. It should be noted that

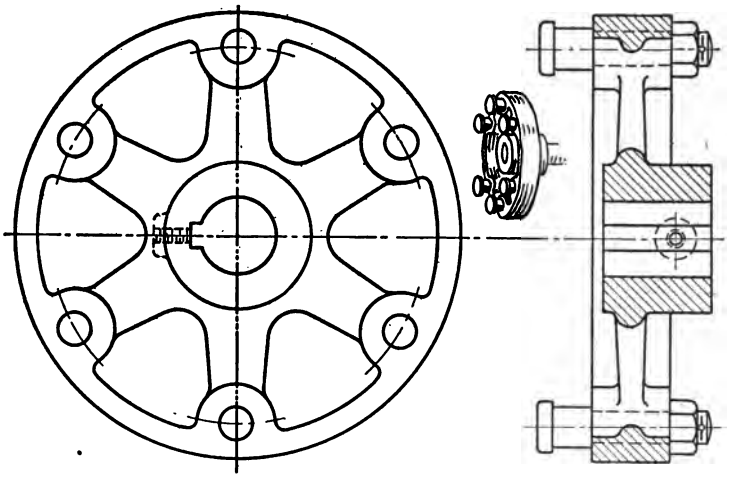

FIG. 367.—Omission of detail beyond section.

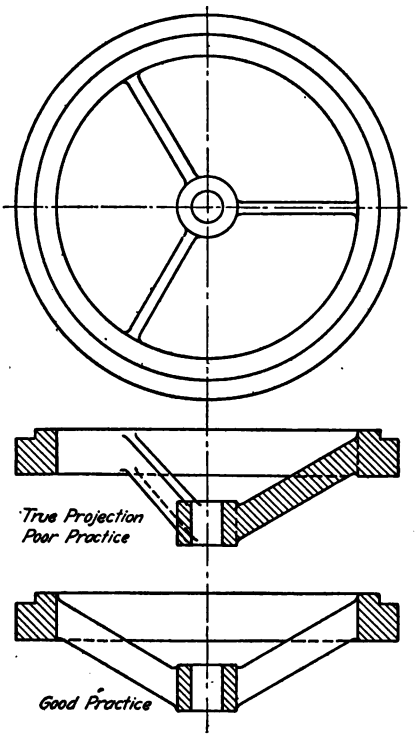

FIG. 368.—Conventional section.

the actual section is here taken through the rib, therefore the contour is dotted. The upper section shows the usual method, but in this case the view is the same as if there were no rib The special representation of the lower view is designed to overcome this difficulty.

The elevation or section of drilled flanges should always show the holes at their true distance from the center, whether or not they come in the plane of the section. In Fig. 371 the true projections are evidently misleading. When the holes do not fall in the plane of the section they should be shown as if revolved into it, and may

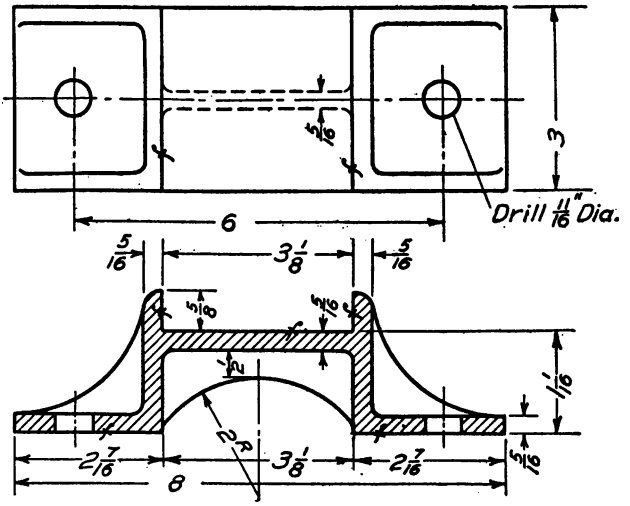

FIG. 369.—Treatment of section through rib.

be indicated either by full or dotted lines as shown in the two lower views.

Another example in which a true section gives an unsymmetrical appearance to a symmetrical piece is shown in Fig. 372. In such cases the section is revolved or "aligned" to preserve the effect of symmetry.

These departures from true projection occur in full views as well as sections. For example, if a front view shows a hexagonal bolt head "across corners," the theoretical projection of the side view would be "across flats." In a working drawing when bolt heads occur they would be drawn across corners in both views, to show the space needed.

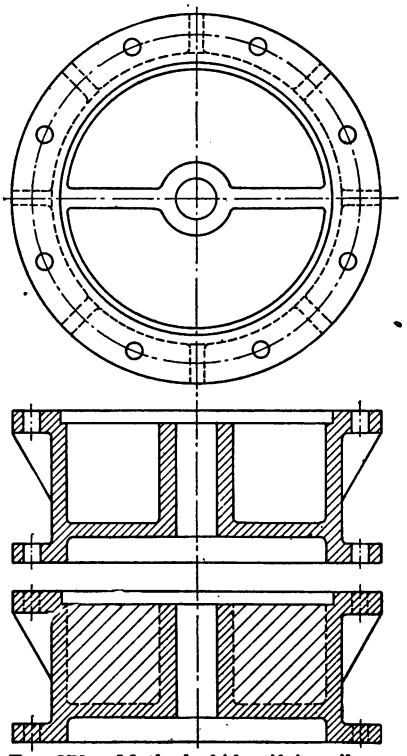

FIG. 370.—Method of identifying rib on section.

Some typical examples in which true lines and curves of intersection are of no value as aids in reading the drawing and are therefore ignored, are shown in Fig. 373.

Suggested treatments of filleted and rounded intersections are shown in Fig. 374.

Pieces which have parts at an angle with each other such as the lever of Fig. 375 may have their alignment straightened out in one view, as shown. Similarly, bent pieces of the type of Fig. 376 should have one view made as a developed view.

Lugs or parts cast on for holding purposes, and to be machined off are often shown in dashed lines. Dashed lines are also used for indicating the limiting positions of moving parts, Fig. 49, and for showing adjacent parts which aid in locating the position or use of the piece, Fig. 377.

Conventional Symbols.—The various methods of indicating screw threads, springs, etc., described in the previous chapter were called "conventional representation" as they did not represent the real outlines of the objects. Other conventions are used by draftsmen for electrical apparatus, materials, etc.

In specifying the materials of which objects are to be made the safest rule to follow is to add the name of the material

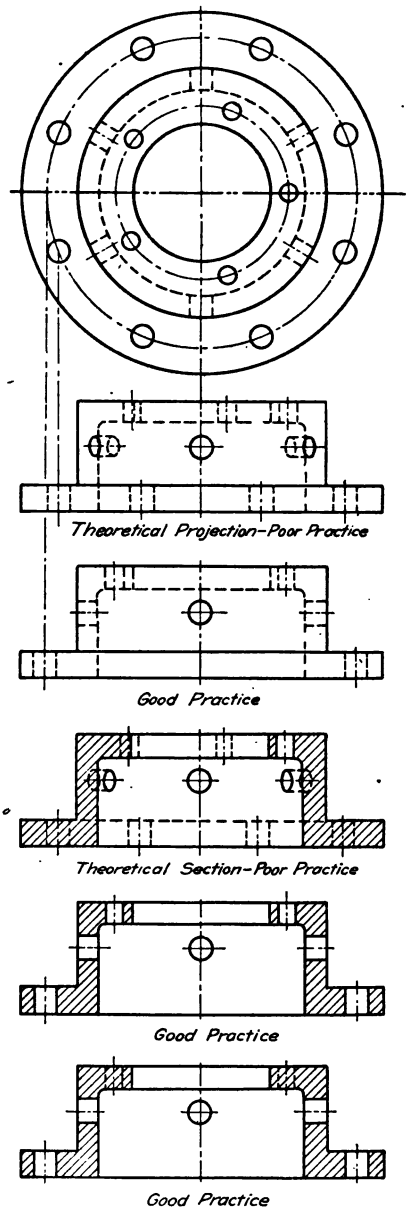

FIG. 371.—Representations of drilling.

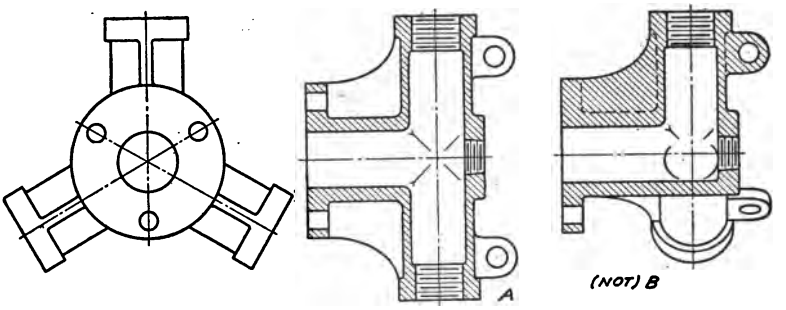

FIG. 372.—Symmetrical section.

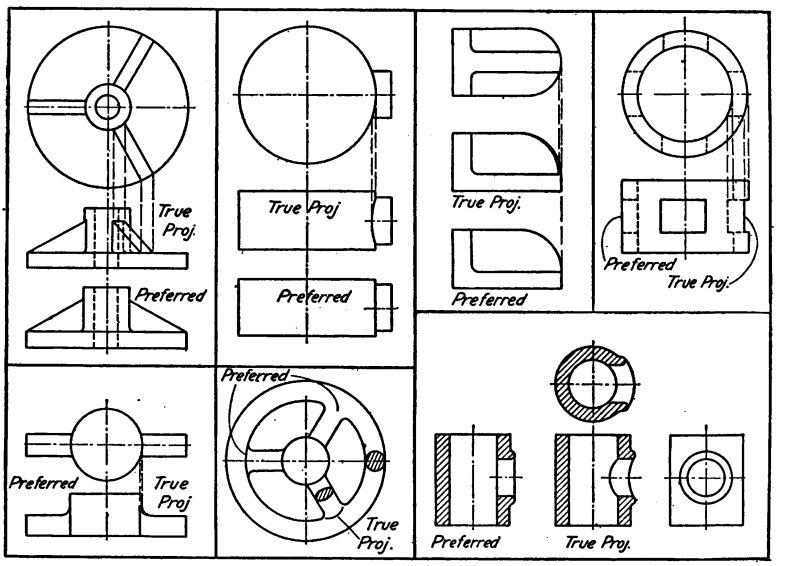

FIG. 373.—Suggested treatment of curves of intersection.

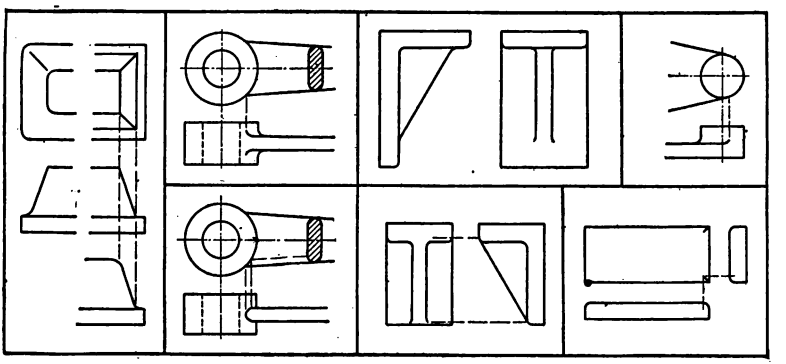

FIG. 374.—Suggested treatment of fillets and rounds.

as a note. There are cases however in which when the piece is shown in section adjacent parts made of different materials can be indicated to good advantage by using different characters of cross-hatching.

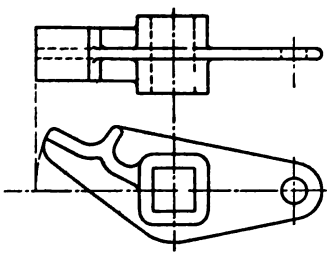

FIG. 375.—Revolved view.

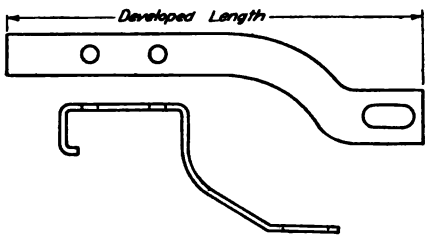

FIG. 376.—Developed view.

The commonest example of this is in distinguishing a bearing or lining metal poured into place hot, such as babbitt metal. It is a universal practice to show such metals by the conventional symbol of crossed lines shown in Fig. 366.

The quickest way to make this symbol is to section over both the lining metal and the adjacent cast iron at once, then cross the lining metal in the other direction.

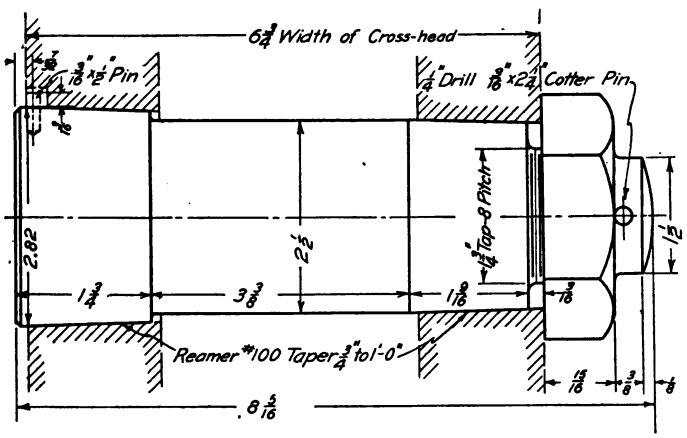

FIG. 377.—Indication of relative position.

There have been a number of different codes of symbols proposed and published for the representation on working drawings of different metals and materials. Aside from their doubtful value on account of the lack of agreement, they are all open to

the same objection, that of added time necessary for their execution. Those of the American Society of Mechanical Engineers have been designed to minimize this objection, and are being generally adopted. They are given on page 318 together with part of the codes of the Bureau of Construction U.S.N. who require the use of their symbols on assembly drawings submitted by firms estimating on Government work.

Until a standard is adopted universally, it would seem necessary to add to a drawing made with symbolical section lining, a key to materials as is done in architectural drawing; or else to letter the name of the material on each piece, in which case the fancy section lining would appear to be unnecessary.

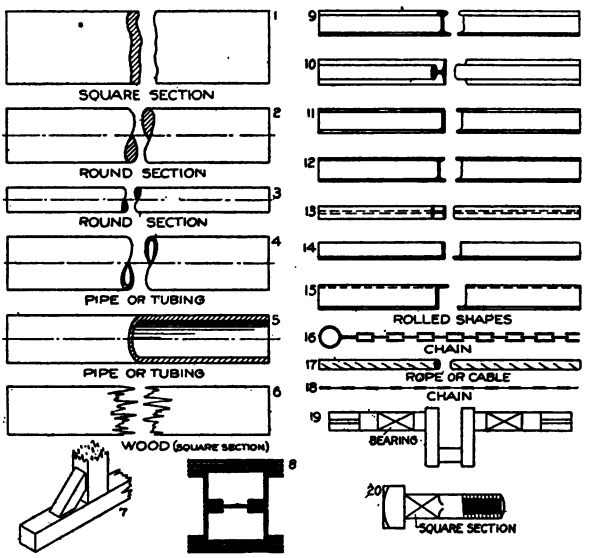

FIG. 378.—Conventional breaks and other symbols.

Conventional Breaks.—In making a detail of a long bar or piece with uniform shape of section, perhaps with detail at each end, there is evidently no necessity for drawing its whole length. It may be shown to larger scale and much better by breaking out a piece, moving the ends together and giving the true length by the dimension, Fig. 437. The characteristic shape of the cross section is indicated by the break. Various conventional breaks, together with other representations are shown in Fig. 378.

Crossed diagonals are used for two distinct purposes, to indicate position or finish for a bearing, and to indicate a piece square in section, but are not apt to be confused.

Sheet metal, and structural shapes to small scale in section may be shown most effectively in solid black with white spaces between parts.

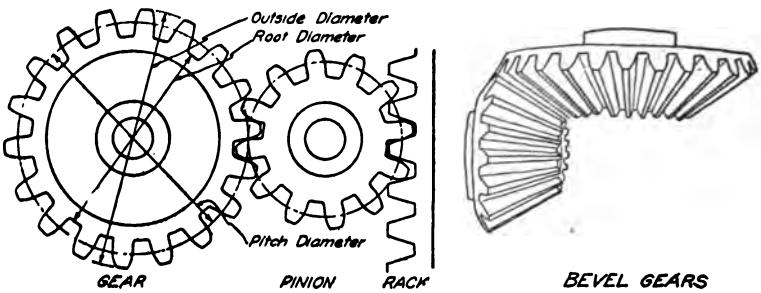

FIG. 379.—Spur and bevel gears.

Electrical diagrammatic symbols are often needed. There is no universal standard but of those proposed on page 317, a number are in general use. The standard wiring symbols of the National Electrical Contractors Association are given on page 316.

Gears.—The subject of gearing properly belongs in the study of mechanism but their representation and specification is of such common occurrence that the names used and the proportions should be familiar to machine draftsmen.

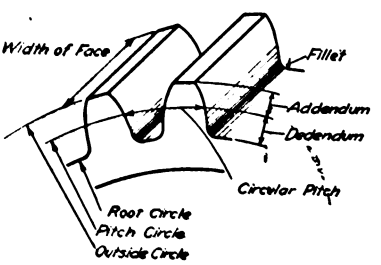

FIG. 380.

Briefly, gears are a substitute for rolling cylinders and cones, designed to insure positive motion. There are many kinds of gears but the most common forms are spur gears and bevel gears, Fig. 379. When one of two gears is much smaller than the other, it is called a pinion. A rack may be thought of as the development of a large gear, and is used with a pinion, Fig. 379.

The larger dimensions of a gear are the width of face, the outside diameter, which is self-explanatory; the root diameter, which is the diameter measured between the bottoms of the gear teeth,

and the pitch diameter, which is about halfway between the other two. Important information concerning gears and gear teeth as illustrated in Fig. 380 consists of the following:

N = number of teeth.

D = diameter of pitch circle = pitch diameter.

P_c = circular pitch = distance from a point on one tooth to the same point on the next tooth measured along the pitch circle = circumference of pitch circle divided by number of teeth = $\frac{\pi D}{N}$

P = diameter pitch, commonly called "Pitch" = a factor obtained by dividing the number of teeth by the pitch diameter = $\frac{N}{D}$

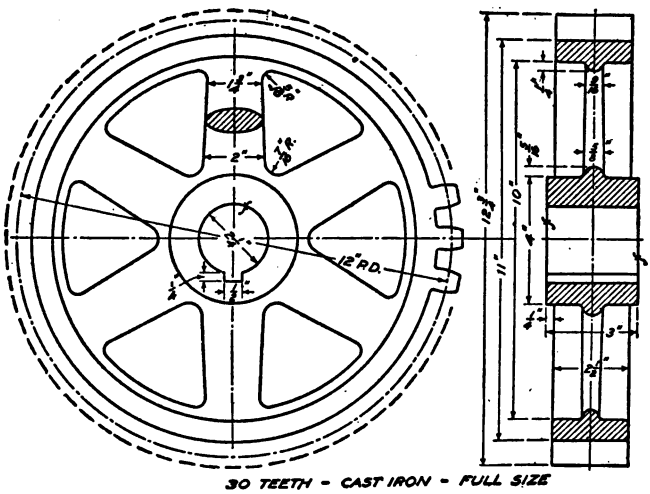

FIG. 381.—Cast spur gear.

Addendum = distance tooth extends outside of pitch circle = $\frac{1}{P}$.

Dedendum = distance tooth extends inside of pitch circle = $\frac{1}{P} + \frac{0.157}{P}$.

Depth of cut = addendum plus dedendum.

D_o = outside diameter = pitch diameter plus two times the addendum.

The necessary information concerning a gear may be found by counting the number of teeth and measuring the outside diameter.

Example.—Given N and D_o to find P (Diameter Pitch).

$$\frac{N}{P} + \frac{2}{P} = D_o \text{ from which } P = \frac{N+2}{D_o}$$

Given N and P to find D (Pitch Diameter).

$$D = \frac{N}{P} \text{ or } N = D \times P$$

Given N and P to find D_o (Outside Diameter).

$$D_o = \frac{N+2}{P}$$

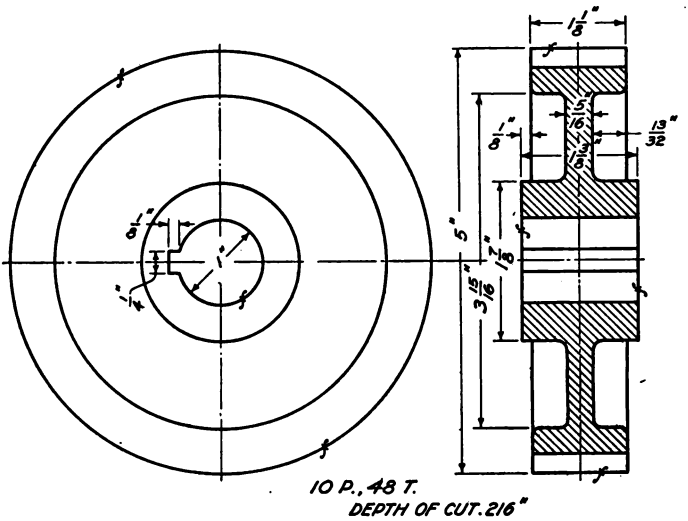

FIG. 382.—Cut spur gear.

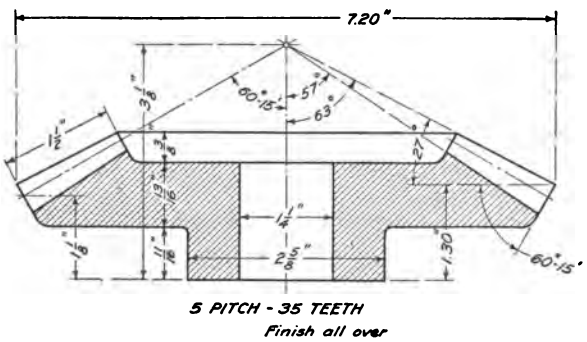

FIG. 383.—Cut bevel gear.

In a similar way any required dimensions may be found by the solution of an equation.

In the working drawings of gears and toothed wheels the teeth

are never drawn on the wheel. For cast gears the pitch circle, addendum circle and root circle are drawn, and the full-sized outline of one tooth, Fig. 381.

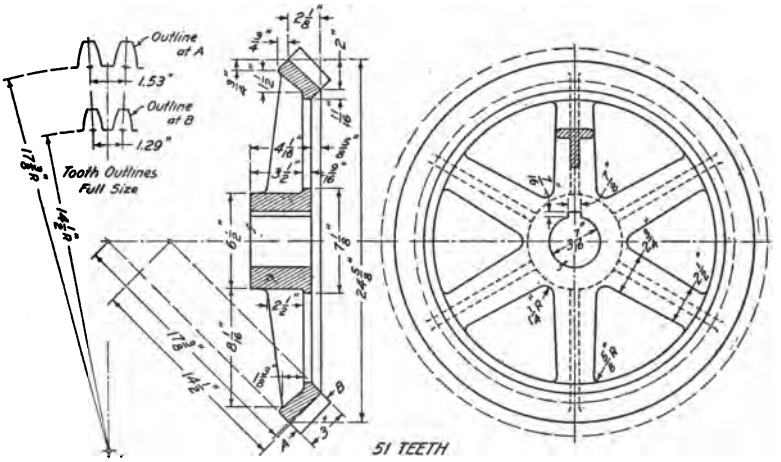

Fig. 384.—Cast bevel gear.

For cut gears the blank is drawn, and notes added for full information regarding pitch, depth of cut, etc., Fig. 382.

Bevel gears are specified in a similar manner, as shown in Figs. 383 and 384, which show a cut gear and a cast gear. For further information on bevel and other classes of gears, see gear manufacturers catalogues and books on mechanism.

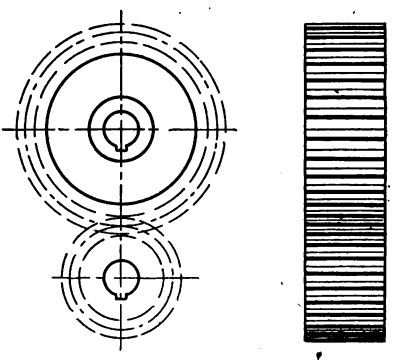

Fig. 385.—Gears in elevation.

On assembly drawings gears are represented in elevation as in Fig. 385 and in section as in Fig. 382.

Cams.—A cam is a machine element used to obtain an irregular or special motion not easily obtained by other means. The shape of a cam is derived from the motion required of it and may take the form of a circle, ellipse, involute, etc., or may be an irregular curve. One form of plate cam is shown in Fig. 387. A cylindrical cam is shown in Fig. 386. The principle involved in drawing a cam is the same in all cases.

Let it be required to move a machine part up and down with a specified motion. The part moved may be a roller, in which case the center of the roller is considered as a moving point. A plate attached to a revolving shaft may be given such a shape that it will cause the roller to rise and allow it to fall in a predetermined manner.

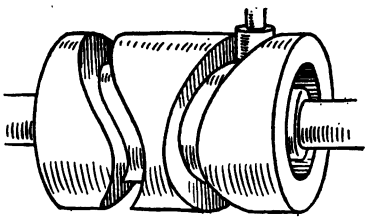

FIG. 386.—Cylindrical cam.

To find the cam outline, Fig. 387. Given point *C*, the center of the shaft, point *A* the lowest position and point *B* the highest position of the center of the roller. It is required to raise the cam with harmonic motion during one-half revolution of the uniformly revolving shaft, allow it to drop one-half way down in-

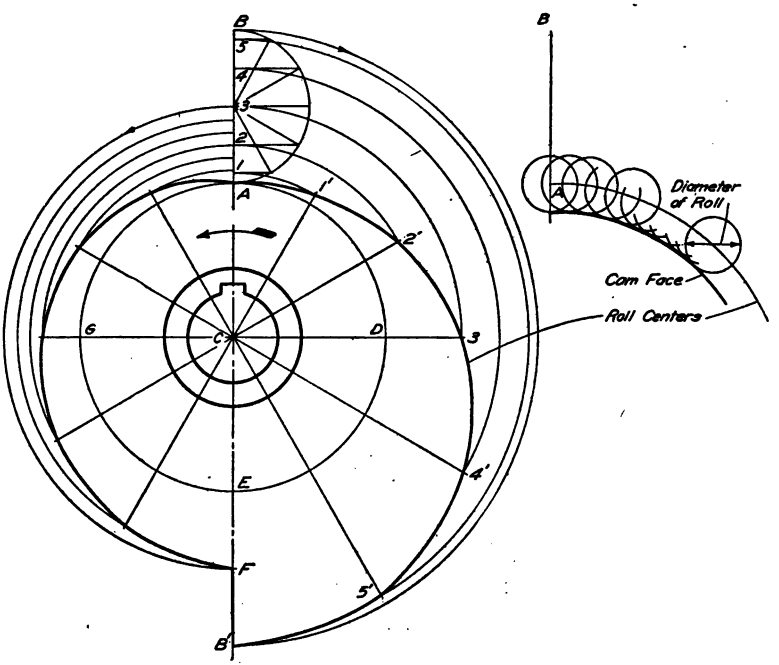

FIG. 387.—Plate cam.

stantly and then drop the remaining distance with uniform motion.

Divide the rise into parts proportional to harmonic motion.

Divide the semicircle ADE into as many equal parts as there are spaces in the rise and draw radial lines. With C as a center and radius $C1$ draw an arc intersecting the first radial line at $1'$. In the same way locate points $2'$, $3'$, etc., and draw a smooth curve through them. If the cam is revolved in the direction of the arrow, it will raise the roller with the desired motion.

Draw $B'F$ equal to one-half AB. Divide $A3$ into six equal parts and EGA into six equal parts. Then for equal angles the roller must fall equal distances. Circle arcs drawn as indicated will locate the required points on the cam outline.

This outline is for the center of the roller, allowance for which may be made by drawing the roller in its successive positions and then drawing a tangent curve as shown in the auxiliary figure.

Commercial Practice.—In commercial drafting *accuracy* and *speed* are the two requirements. The drafting room is an expensive department and time is an important element. The draftsman must therefore have a ready knowledge not only of the principles of drawing, but of the conventional methods and abbreviations, and any device or system that will save time without sacrificing clearness is desirable.

The usual criticism of the student by the employer is his lack of appreciation of the necessity of *speed*.

PROBLEMS

The first part of any working drawing problem consists of the selection of views, the choice of suitable scales, and the arrangement of the sheet. In class work a preliminary sketch layout should be submitted for approval before the drawing is commenced.

All views of any piece must be drawn to the same scale, but different pieces on the same sheet may be drawn to different scales.

The problems here given may be drawn on $12'' \times 18''$ or $18'' \times 24''$ sheets. They have been designed to cover the points outlined in the text, and their division into groups will suggest a selection of one or more from each group in making up a course.

Group I. Exterior Detail Drawings.

Problems 1 to 6, Figs. 388 to 393. Make complete working drawings fully dimensioned and with necessary notes, from which the pattern could be made and the piece finished in the shop.

Group II. Detail Drawings in Section.

7. Fig. 394. Working drawing, one view in section.
8. Fig. 395. Working drawing, size to be assigned.
9. Fig. 396. Working drawing, size to be assigned.

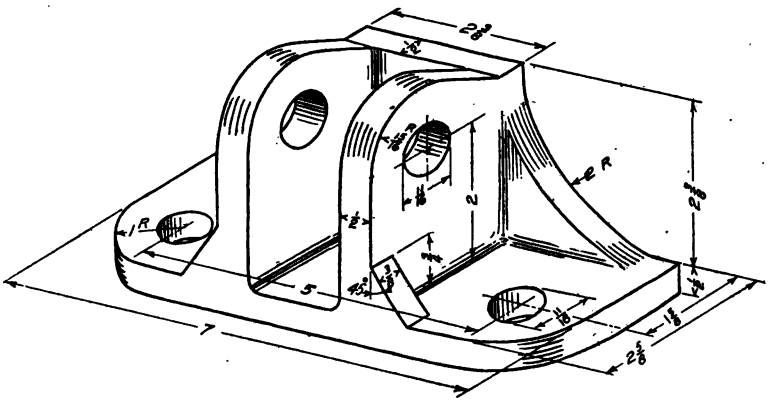

FIG. 388.—Prob. 1.

10. Fig. 397. Working drawing of fly wheel, outside diameter 60″, hub 6″, bore 3″, keyway ½″ × ⅞″. Arms at rim ¾ size at hub.

11. Fig. 398. Working drawing of pulley. Figure dimensions from formulas given. Suggested sizes (*a*) 24″ diam. 6″ face, 2″ bore; (*b*) 42″ diam. 14″ face, 3 7/16″ bore; (*c*) 20″ diam. 10″ face, 2 3/16″ bore; (*d*) 12″ diam.

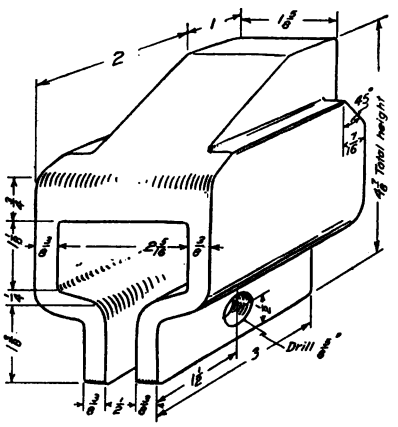

FIG. 389.—Prob. 2.

16″ face, 2 7/16″ bore; (*e*) 60″ diam. 8″ face, 3 15/16″ bore; (*f*) 60″ diam. 4″ face, 1 7/16″ bore.

12. Fig. 399. Working drawing of acid pan. Larger scale part sections of inlet and outlet should be made, to avoid crowding dimensions on the complete views.

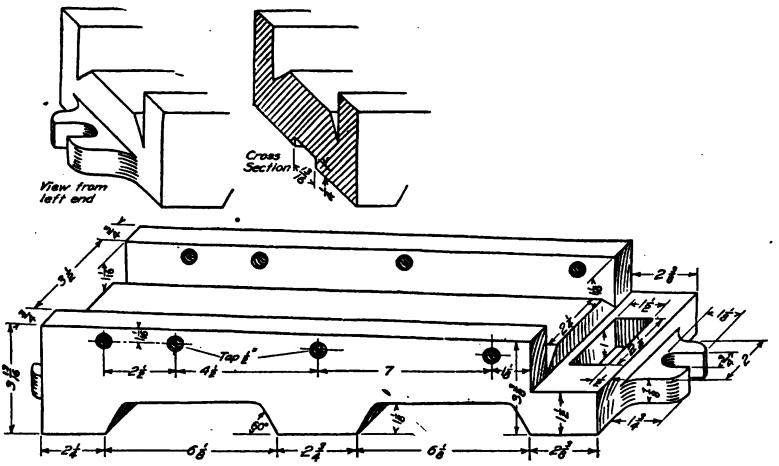

FIG. 390.—Prob. 3.

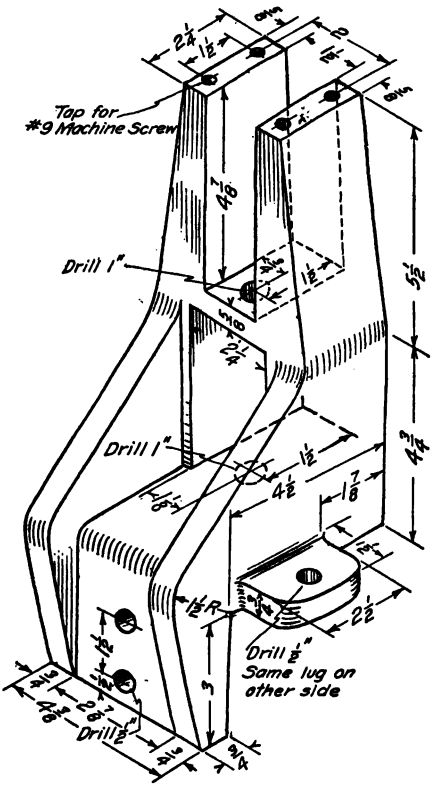

FIG. 391.—Prob. 4.

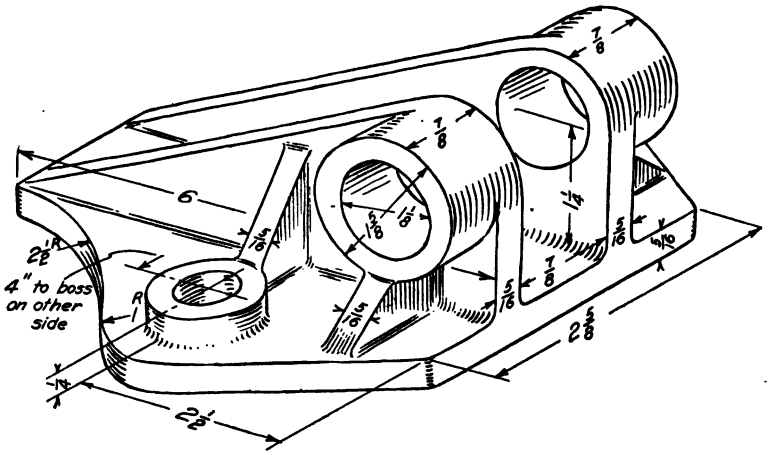

FIG. 392.—Prob. 5.

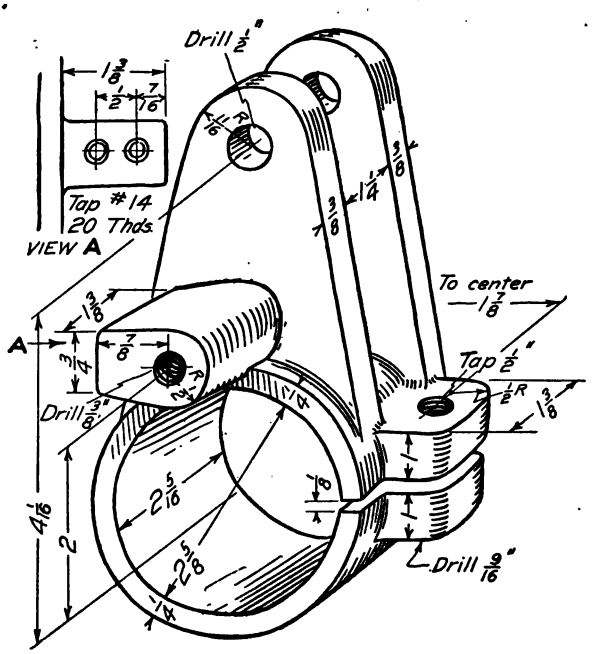

FIG. 393.—Prob. 6.

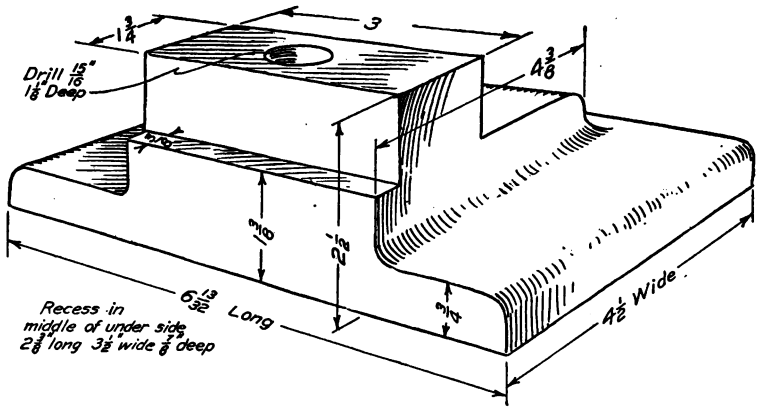

FIG. 394.—Prob. 7.

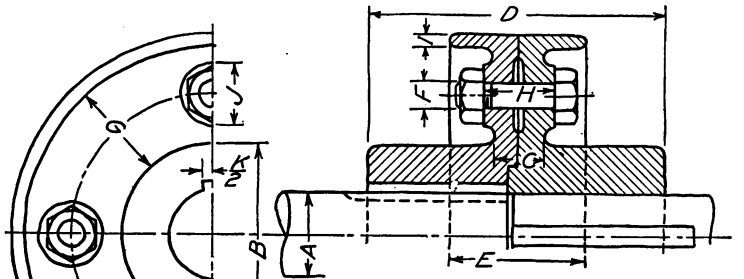

A	B	C	D	E	F	G	H	I	J	K
1 1/2	3 1/2	1	6	2 1/2	1/2	2	1 3/8	1/4	1 1/4	3/8
1 3/4	3 3/4	1 1/8	6 1/2	3	5/8	2 1/4	1 1/2	5/16	1 1/2	3/8
2	4 1/4	1 1/4	7	3 1/4	5/8	2 1/4	1 5/8	5/16	1 1/2	1/2
2 1/4	4 3/4	1 3/8	7 1/2	3 1/2	3/4	2 1/2	1 3/4	7/16	1 1/2	3/8
2 1/2	5 1/4	1 1/2	8	3 3/4	3/4	2 1/2	1 7/8	3/8	1 3/4	5/8
2 3/4	5 3/4	1 5/8	9	4	7/8	2 3/4	2	3/8	2	3/8

FIG. 395.—Prob. 8.

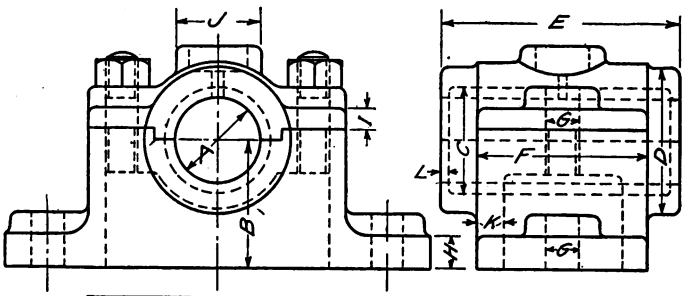

A	B	C	D	E	F	G	H	I	J	K	L
1 1/2	1 3/4	1 13/16	2 3/8	4 1/2	2 1/4	1/2	1/2	1/2	1 1/4	3/8	3/16
1 3/4	2	2 3/16	3	5 1/4	3 1/4	5/8	1/2	1/2	1 1/4	1/2	3/16
2	2 1/4	2 1/16	3	6	3 1/4	5/8	5/8	5/16	1 3/4	1/2	3/16

FIG. 396.—Prob. 9.

13. Fig. 400. Working drawing of base plate.
14. Fig. 401. Working drawing of bearing.

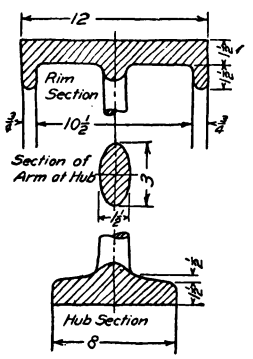

Fig. 397.—Prob. 10.

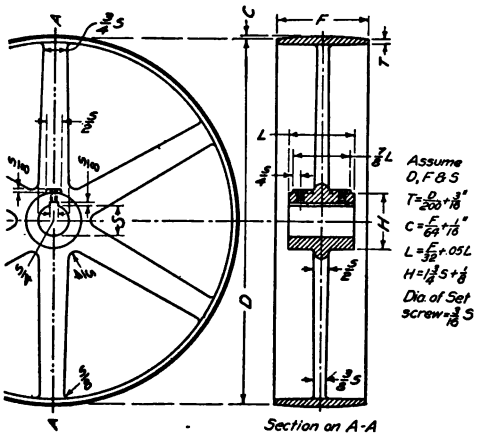

Fig. 398.—Prob. 11.

Group III. Assembly Drawings from Details.

15. Fig. 402. Assembly drawing of form for making piston washers. Supply 1¼" bolt and nut.

16. Fig. 403. Assembly drawing of friction clutch shifter. The details are given in Fig. 360.

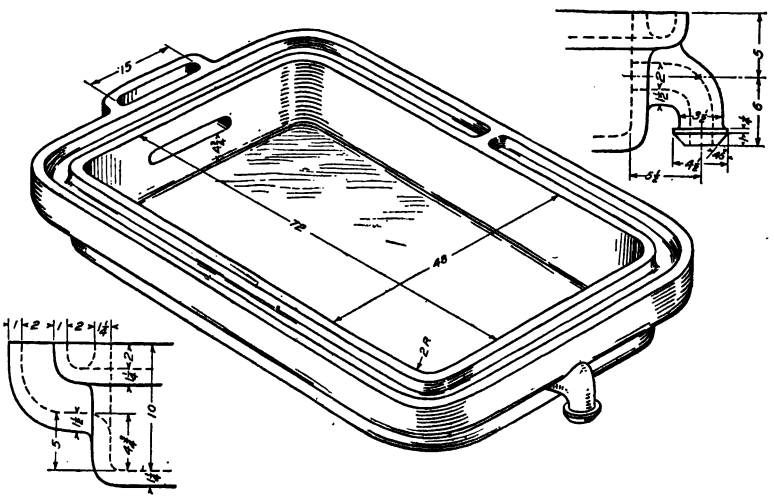

Fig. 399.—Prob. 12.

17. Fig. 404. Detail and assembly drawings of pop safety valve, from sketches.

18. Assembly drawing of leveling block from sketches in Fig. 450.

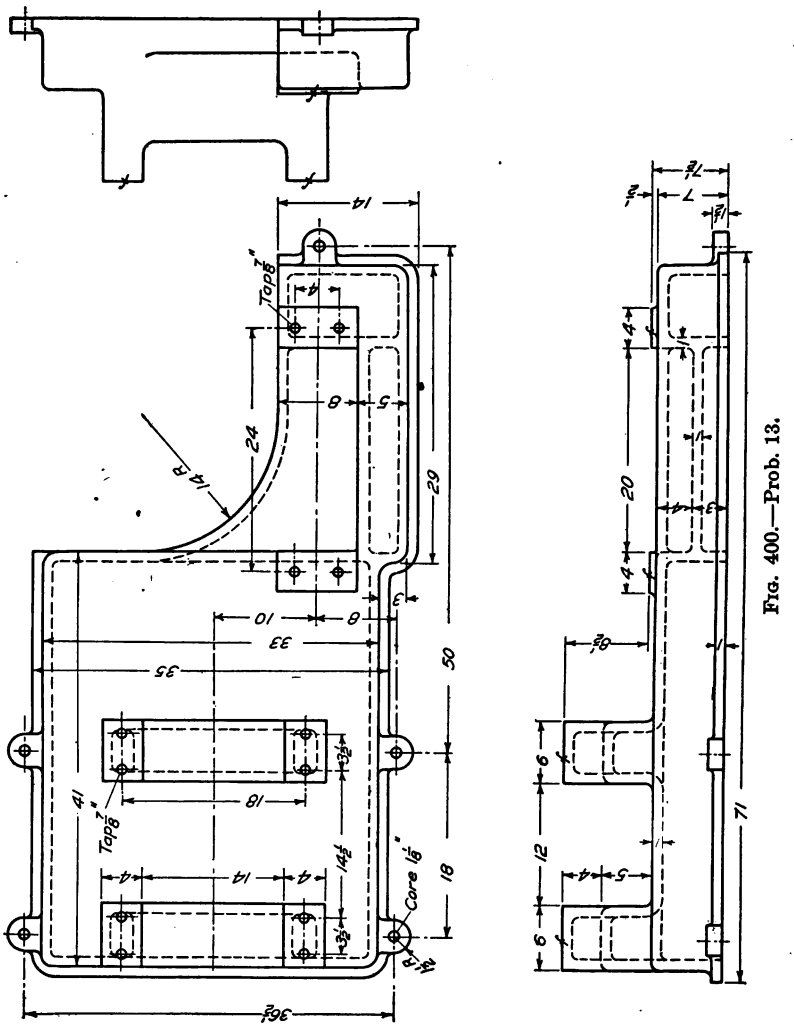

Fig. 400.—Prob. 13.

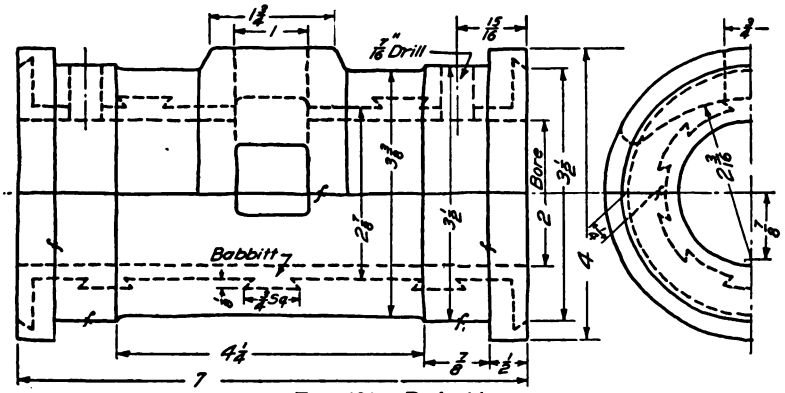

FIG. 401.—Prob. 14.

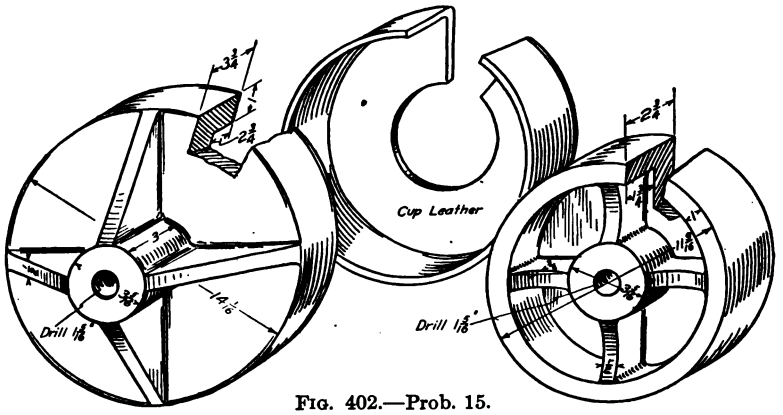

FIG. 402.—Prob. 15.

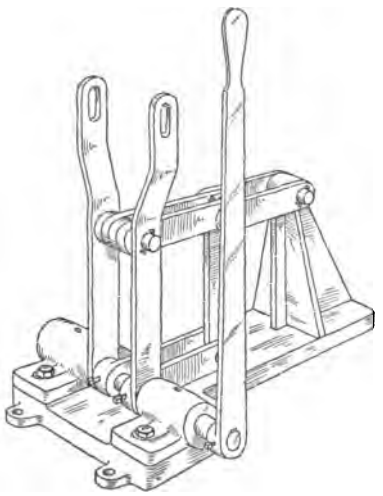

FIG. 403.—Prob. 16.

Group IV. Dimensioning Studies.

19, 20, 21, 22. Figs. 405 to 408. The figures given are half-size. Make full-size working drawings from them, and dimension completely. Assume and indicate finished surfaces.

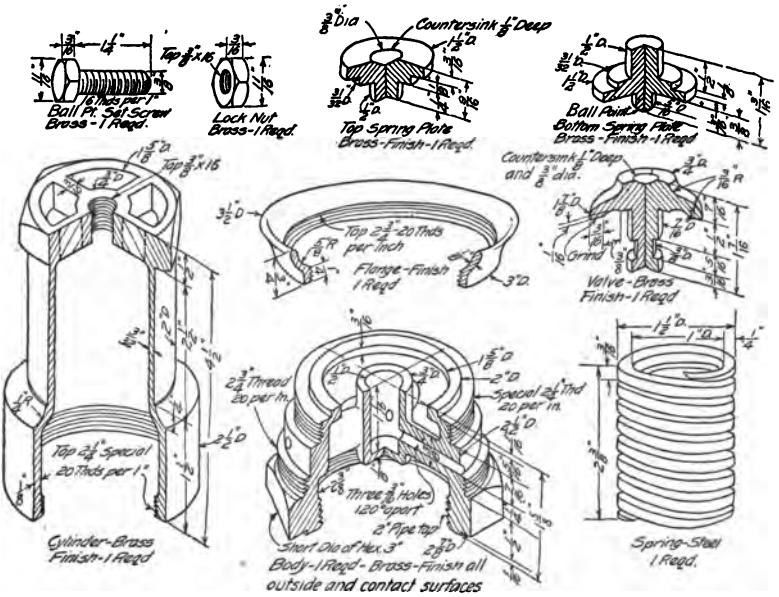

FIG. 404.—Prob. 17.

23, 24. Figs. 409, 410. Make freehand working sketches (orthographic), and show the location of all dimensions, according to the rules for dimension-

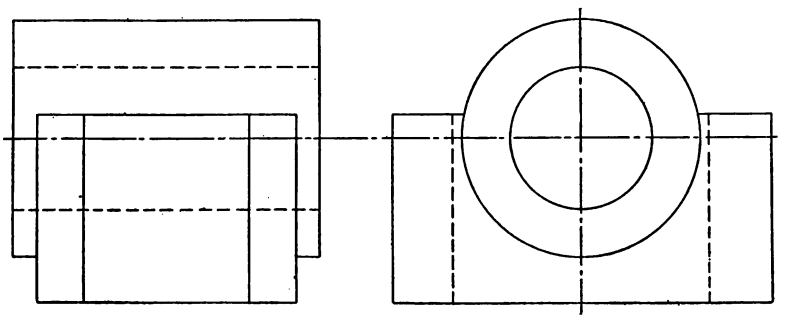

FIG. 405.—Prob. 19.

ing, by adding dimension lines with arrow-heads, leaving blank space for figures. Fill in the blank space with consecutive numbers indicating the order in which the dimension lines should be drawn.

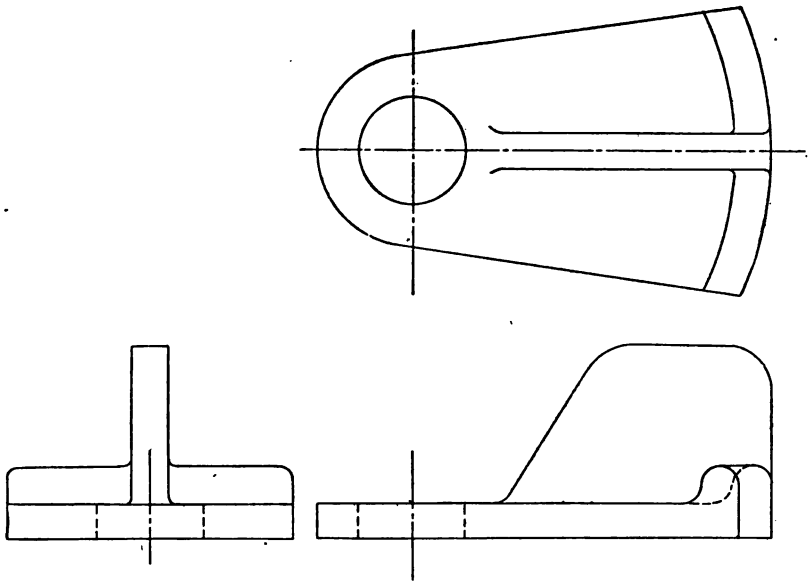

FIG. 406.—Prob. 20.

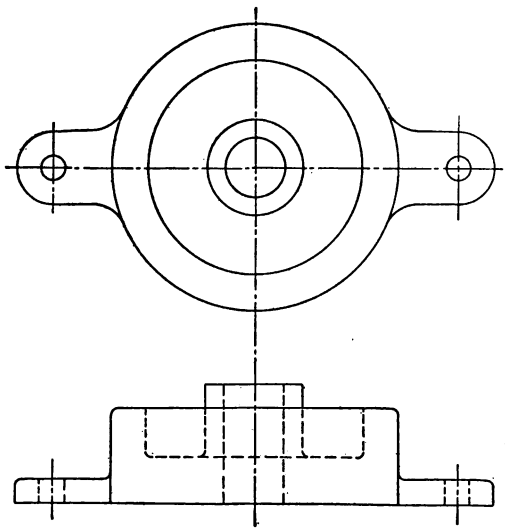

FIG. 407.—Prob. 21.

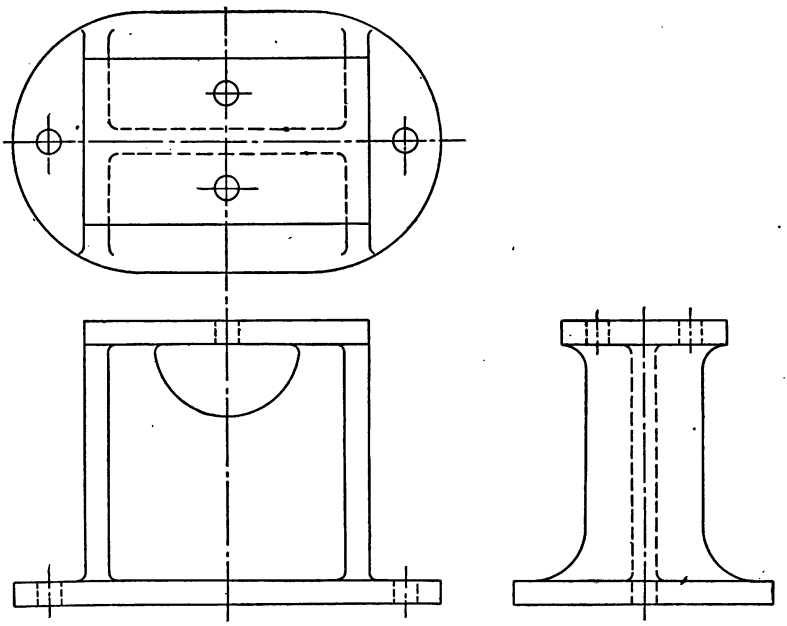

FIG. 408.—Prob. 22.

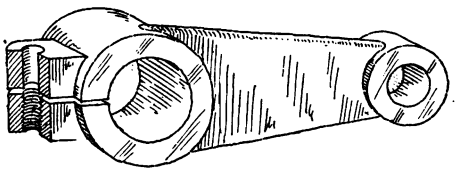

FIG. 409.—Prob. 23.

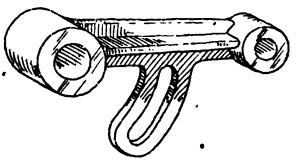

FIG. 410.—Prob. 24.

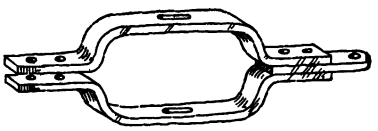

FIG. 411.—Prob. 25.

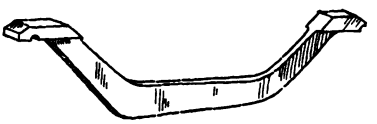

FIG. 412.—Prob. 26.

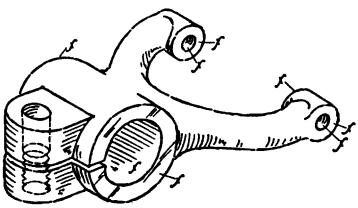

FIG. 413.—Prob. 27.

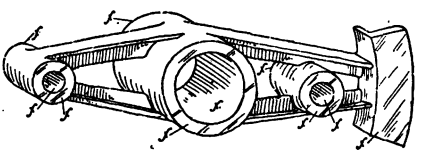

FIG. 414.—Prob. 28.

25, 26. Figs. 411, 412. Make freehand orthographic sketches, indicating dimensions for the blacksmith. Holes to be punched.

27, 28. Figs. 413, 414. Make freehand orthographic sketches, indicating necessary machine shop dimensions.

Group V. Details from Assembly Drawings.

29. Fig. 415. Make detail drawings for tool post.

30. Fig. 416. Make detail drawings for hanger.

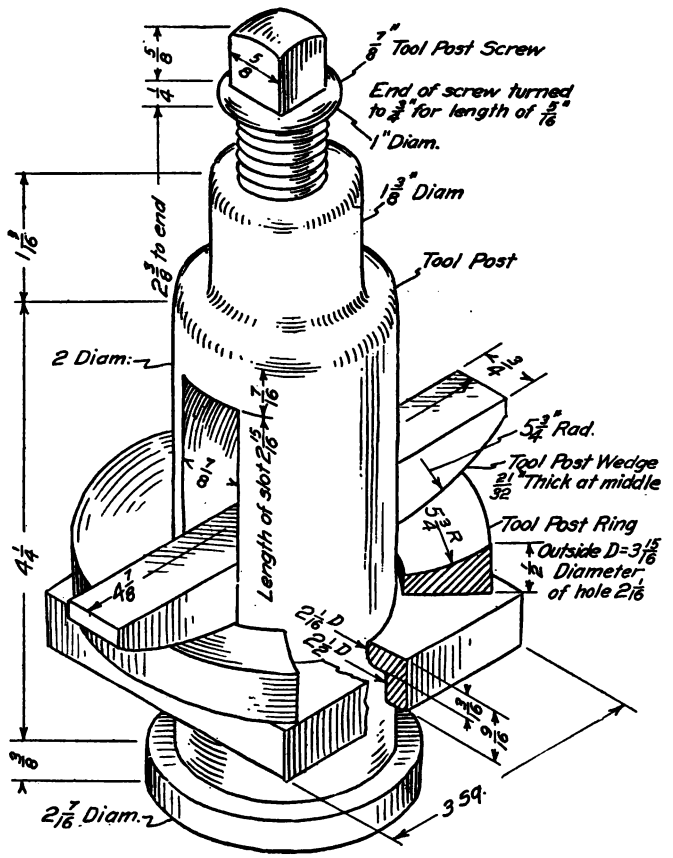

FIG. 415.—Prob. 29.

31. Fig. 417. Make detail drawings for belt tightener. Number the parts and make a material list.

Group VI. Section Studies.

32 to 36. Figs. 418 to 422. Make working drawings with sectional views, observing conventional practice.

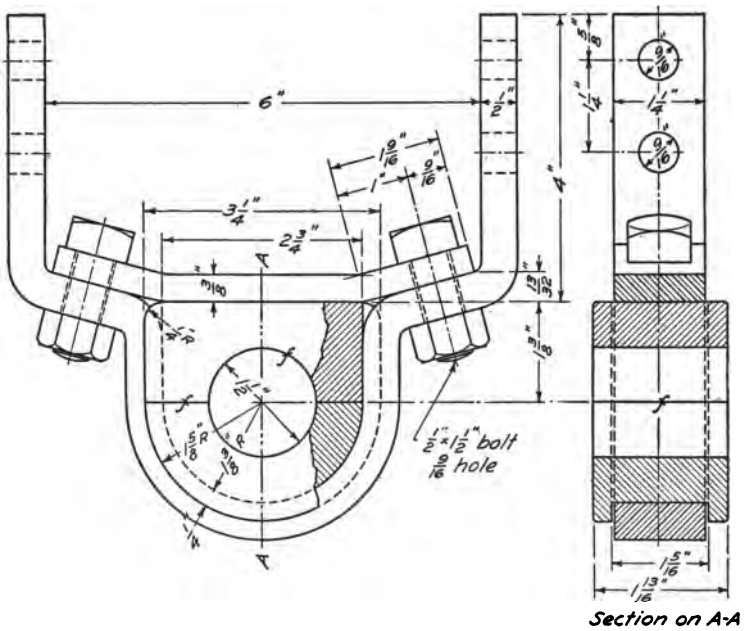

FIG. 416.—Prob. 30.

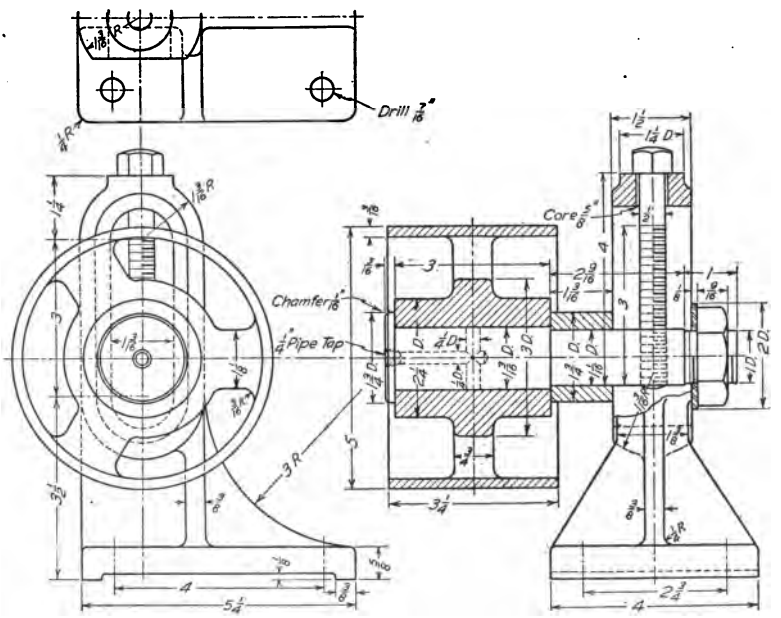

FIG. 417.—Prob. 31.

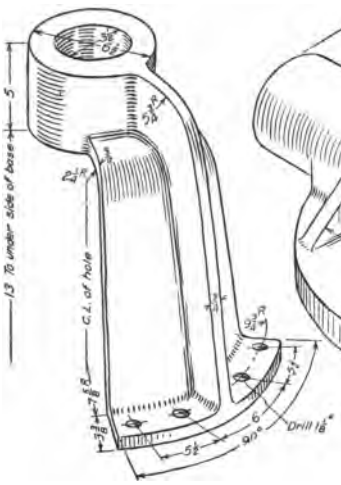

FIG. 418.—Prob. 32.

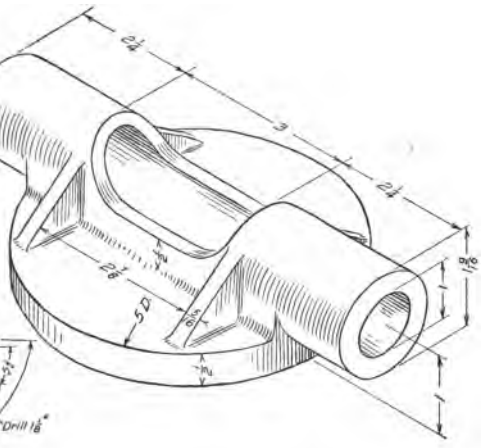

FIG. 419.—Prob. 33.

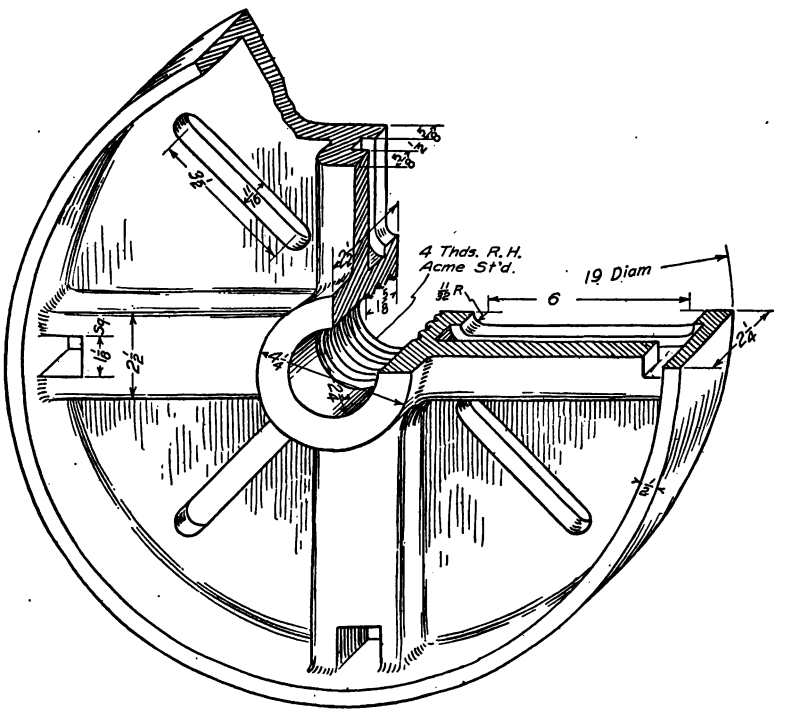

FIG. 420.—Prob. 34.

Group VII. Special Representation.

37 to 42. Figs. 423 to 428. Make working drawings, selecting views carefully. True projection sometimes gives views not only difficult to draw

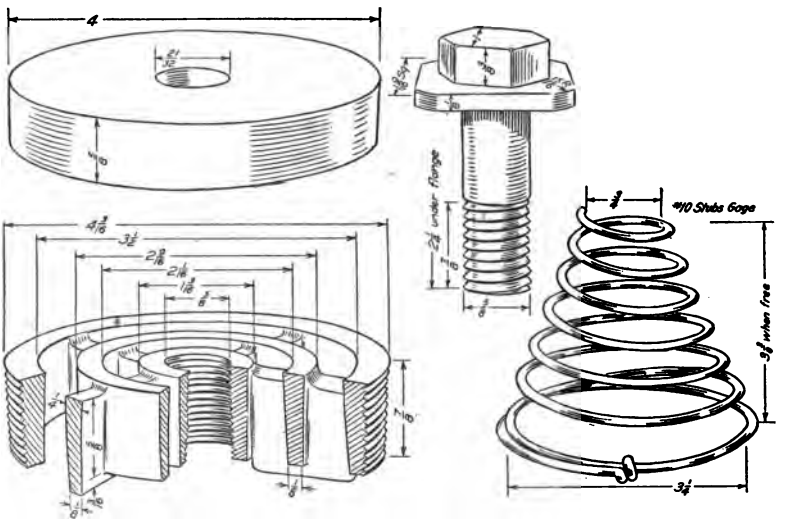

FIG. 421.—Prob. 35.

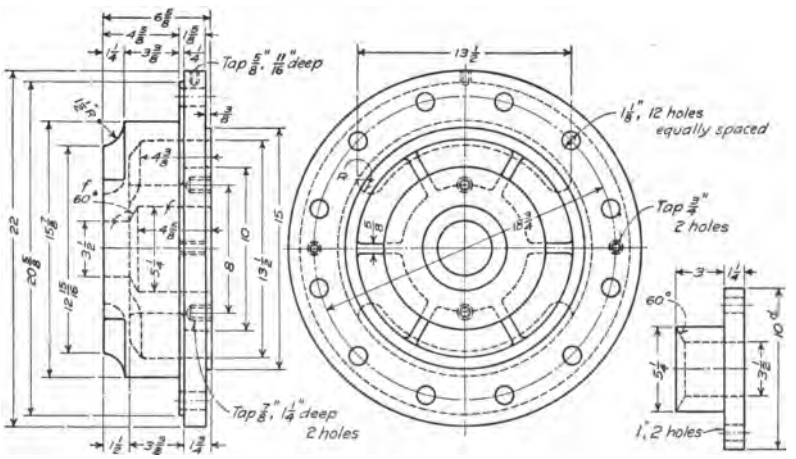

FIG. 422.—Prob. 36.

but often of doubtful value in representation. These examples illustrate the statements of pages 179 to 182 regarding the violation of theory, both in sectional and exterior views.

Group VIII. Cams and Gears.

43. Fig. 429. Make a drawing for a plate cam to satisfy the following conditions: With center at *O*, revolution in direction of arrow, the follower

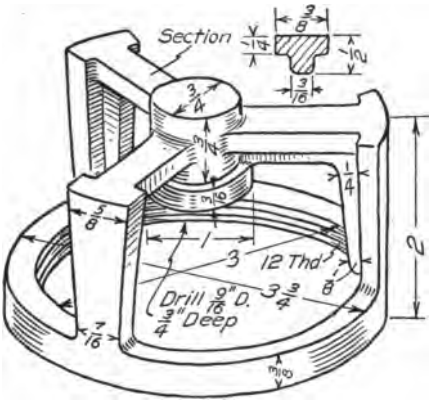

FIG. 423.—Prob. 37.

starts at point *A* and rises to *B* with uniform motion during ⅓ revolution, remains at rest ⅓ revolution and drops with uniform motion the last ⅓ revolution, to the starting point. $AO = \frac{7}{8}''$; $AB = 1\frac{3}{4}''$; diam. of shaft

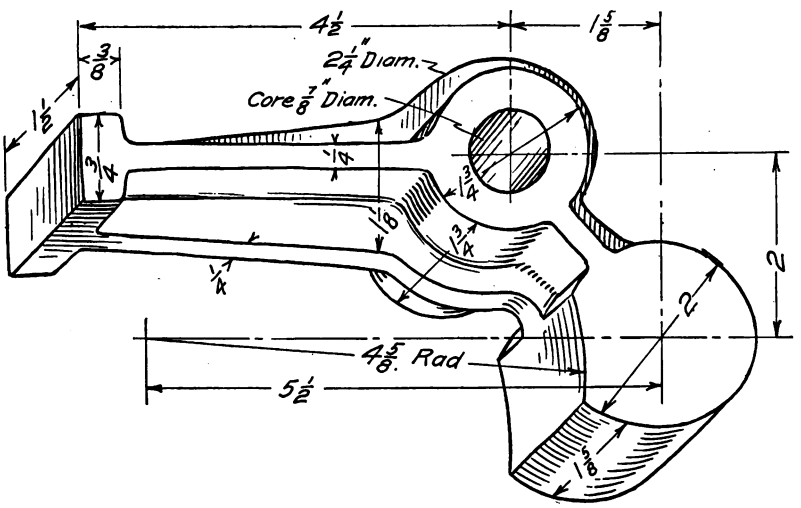

FIG. 424.—Prob. 38.

¾"; diam. of hub 1¼"; thickness of plate ½"; length of hub 1¼"; diam. of roller ½".

44. A broken spur gear has been measured and the following information obtained. No. of teeth, 33. Outside diam. 4⅜"; width of face 1"; diam.

of shaft $\frac{7}{8}$"; length of hub $1\frac{1}{4}$". Make drawing of gear blank with all dimensions and information necessary for making a new gear. Dimensions not given above are to be obtained from drawing as it is made.

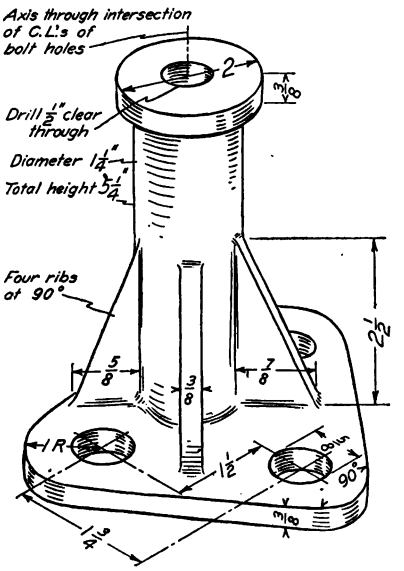

FIG. 425.—Prob. 39.

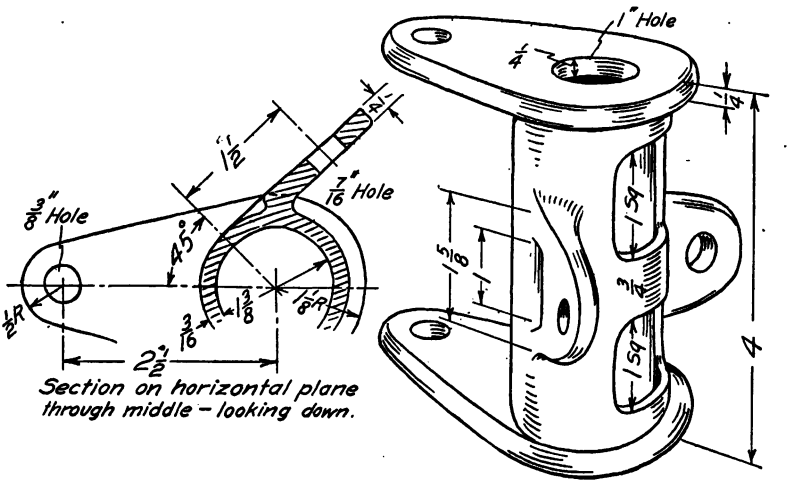

FIG. 426.—Prob. 40.

45. Make drawing for a spur gear. The only information available is as follows: Root diam. 8.1372; outside diam. 8.2"; width of face $1\frac{7}{8}$; diam. of shaft $1\frac{3}{8}$"; length of hub 2".

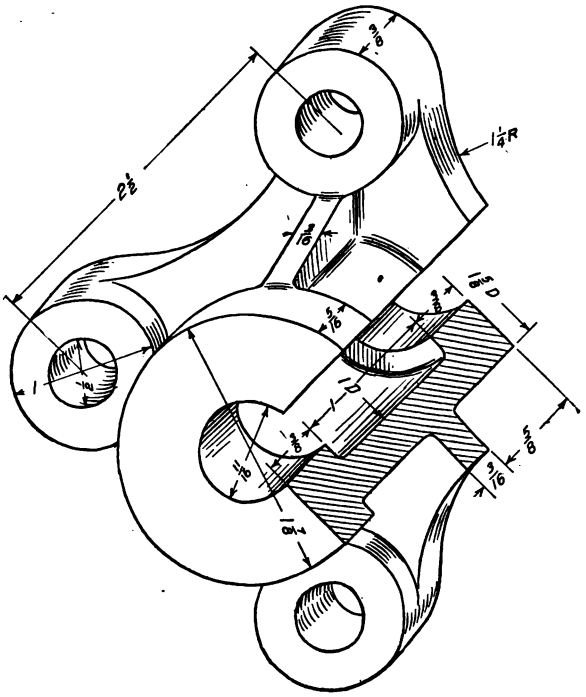

FIG. 427.—Prob. 41.

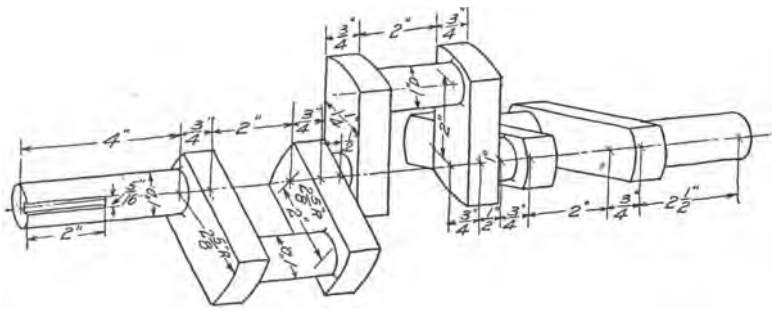

FIG. 428.—Prob. 42.

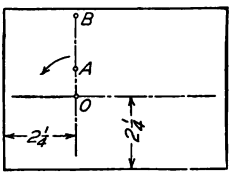

FIG. 429.—Prob. 43.

Group IX. Checking Studies.

46, 47, 48. Figs. 430, 431, 432. These drawings are incorrect in several places, both in representation, placing of dimensions, and distances. Check for errors, following the system given on page 176, and redraw in good form. Fig. 432 is very faulty in technic. Mark the faults, in pencil, on the figure before redrawing.

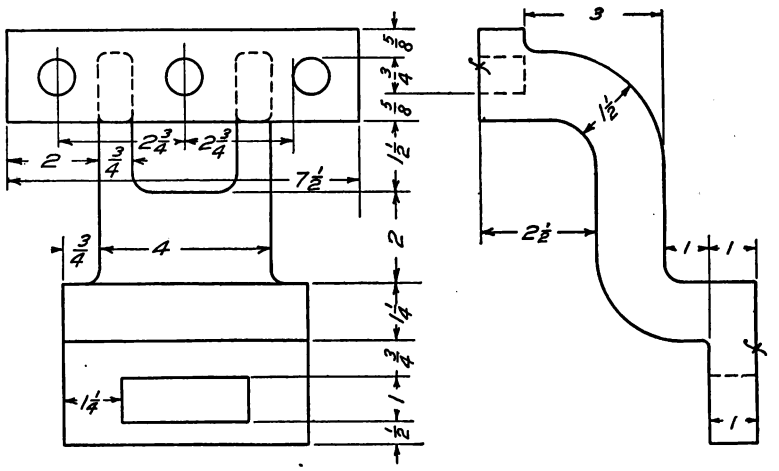

FIG. 430.—Prob. 46. An incorrect drawing to be checked for errors.

Group X. Assembly and Detail Drawings.

49. Figs. 433 and 434. Make an assembly drawing (exterior) of the bench press, or shaft straightener. The drawing is to have such dimensions as are necessary to show the space required, to indicate the capacity and for purposes of locating. Other dimensions to be omitted. Supply neces-

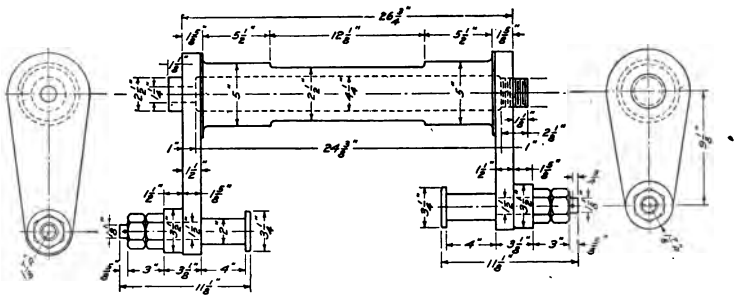

FIG. 431.—Prob. 47. An incorrect drawing to be checked for errors.

sary bolts, screws, and pins. Shade lines may be used to advantage in this drawing. (See page 288.)

50. Fig. 435. Make assembly drawing of gas engine mixer from details.

51. Figs. 436 and 437. Make complete detail drawings of 6″ × 12″ water end of pump. Note that the figures shown are freehand sketches which

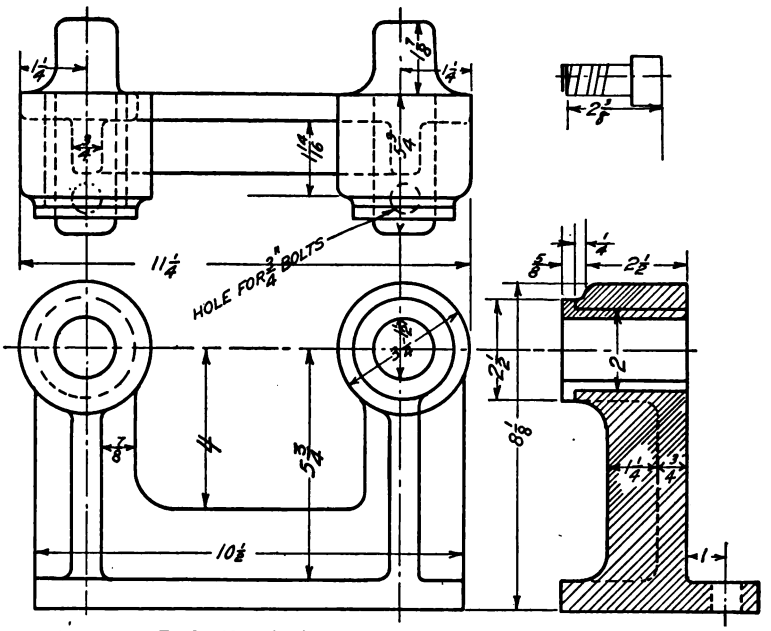

FIG. 432.—Prob. 48. An incorrect drawing to be checked for errors.

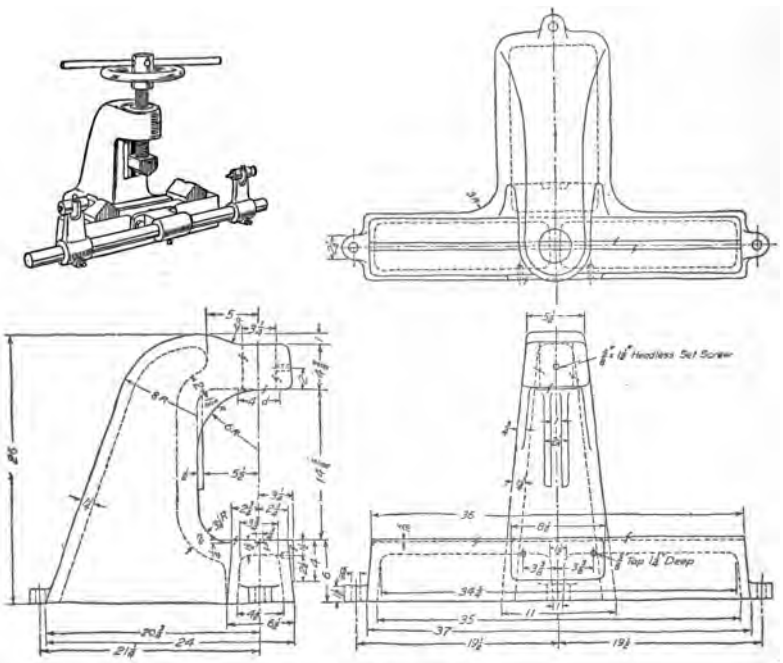

FIG. 433.—Prob. 49.

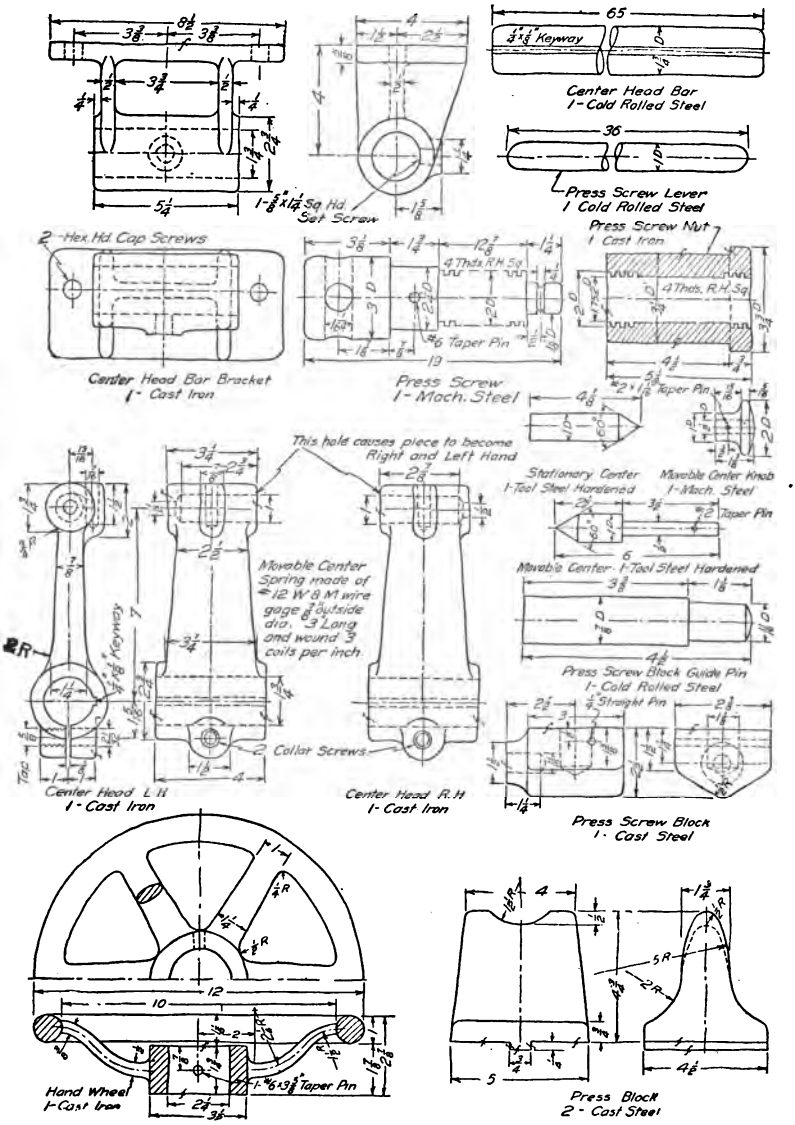

FIG. 434.—Prob. 49.

are not to be copied but used as sources of information from which to make the necessary choice of views, using sections or different views where desirable.

52. Figs. 436 and 437. Make sectional assembly drawing, two views, of 6″ × 12″ water end of pump (6″ diam. 12″ stroke). Choose sections which will tell the most about the pump. Draw the piston at the left end of stroke, just starting to the right, showing the proper valves open or closed. Details of the valve parts are given in Fig. 421, and may be drawn in this assembly either in full or in section. Put on all dimensions except those of use only to the patternmaker.

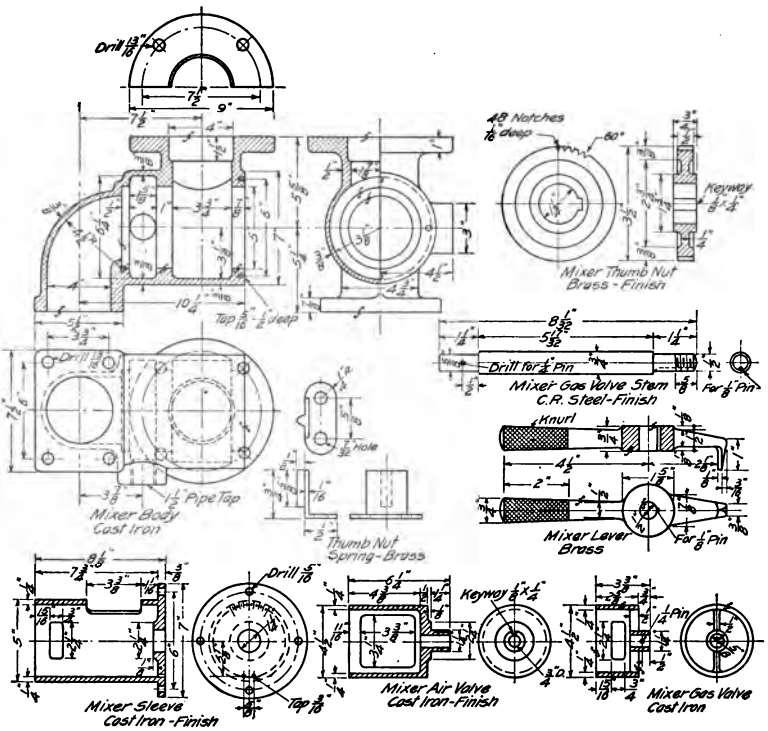

FIG. 435.—Prob. 50.

53. Fig. 438. Draw two views of piston and piston rod assembled, with complete dimensions. Make the piston in section in both views, and section such other portions of the assembly as will show the construction and arrangement to the best advantage.

54. Fig. 439. Make detail drawings for Corliss engine dash pot. Show each piece separately with complete dimensions and notes for materials and finish.

55. Fig. 440. Make assembly drawing of milling machine vise from details. The sketch is given to show the arrangement of the parts.

56. Fig. 441. Make assembly drawing of center grinder from details.

57. Fig. 442. The rectangular inset shows the detail sketch of a dumper clutch fork and a picture of the jig used in machining it. The sketches of

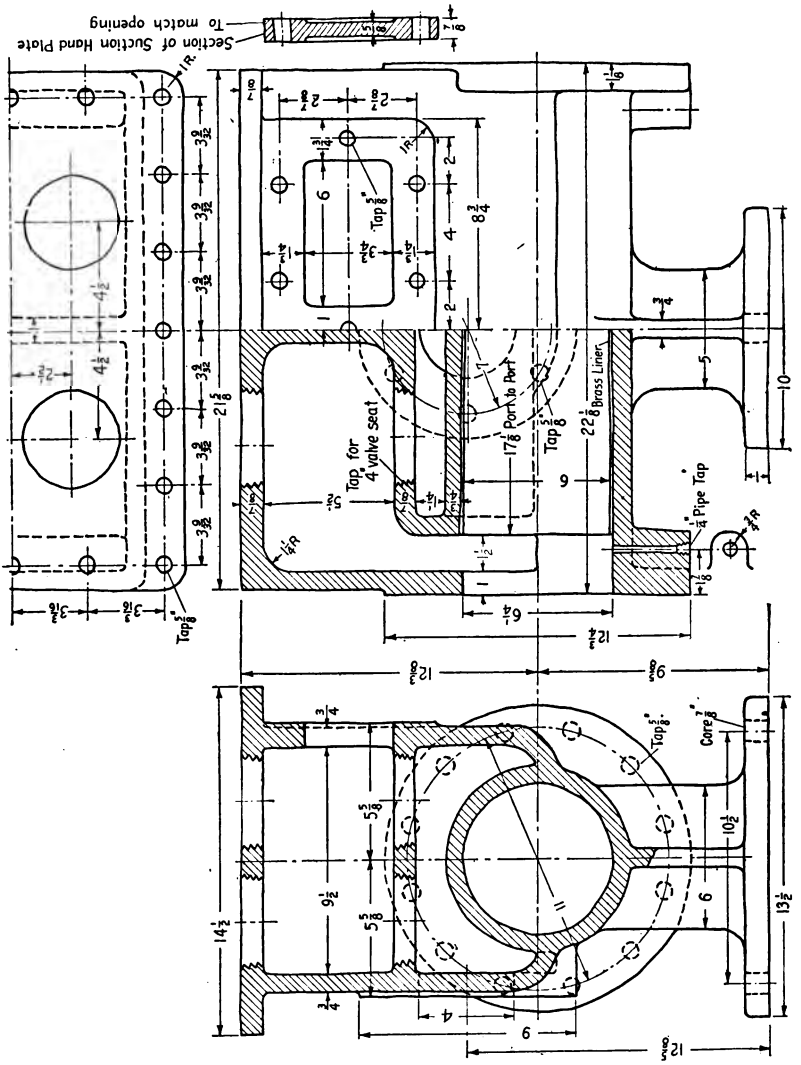

FIG. 436.—Probs. 51 and 52.

the parts of the jig are given in the figure. Make complete detail drawings for the jig, with bill of material and title.

58. Fig. 442. Make complete assembly drawings, three views, of jig with clutch fork in place, giving "go together" dimensions.

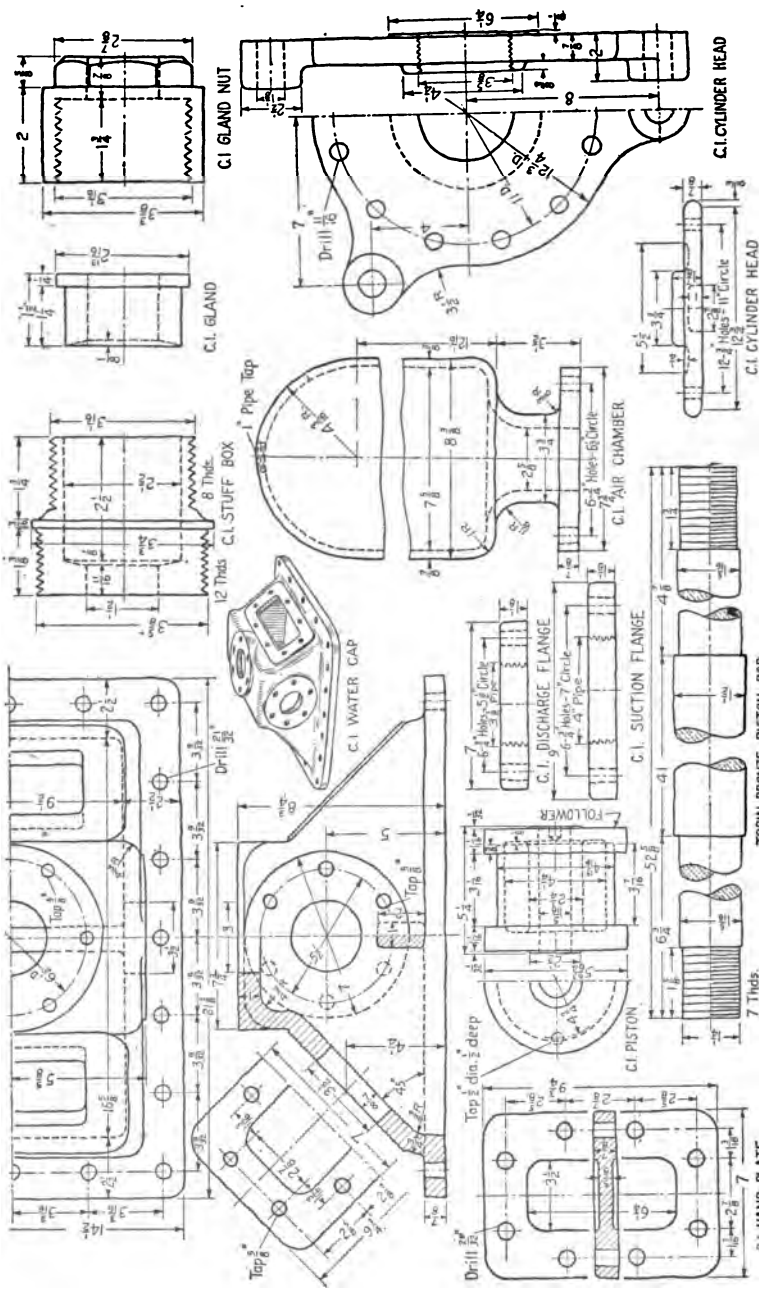

Fig. 437.—Probs. 51 and 52.

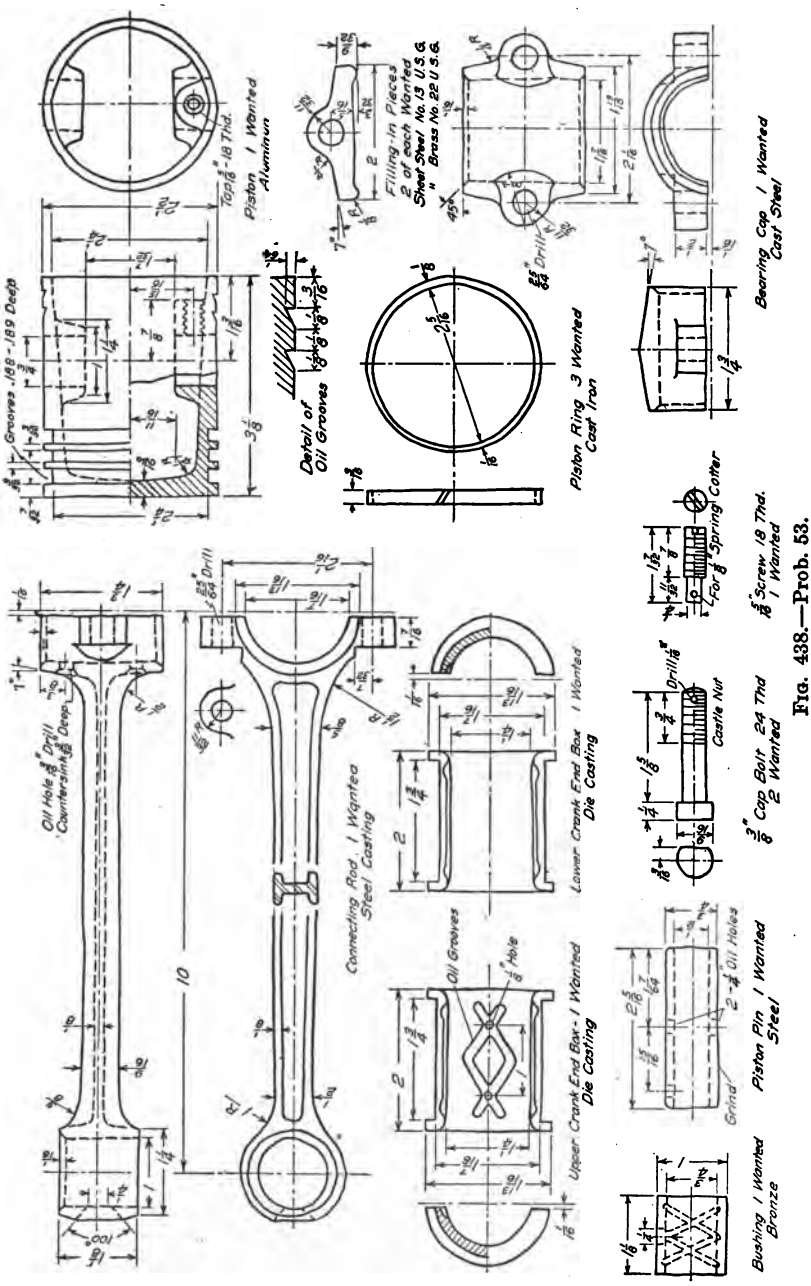

Fig. 438.—Prob. 53.

If problem **57** is omitted, this assembly drawing should be fully dimensioned.

59. Make detail drawings of expansion joint from assembly drawing, Fig. 347.

60. Select a simple machine such as a bench grinder, power hack saw or bench drill, or a part of a larger machine. Learn the names of the parts and

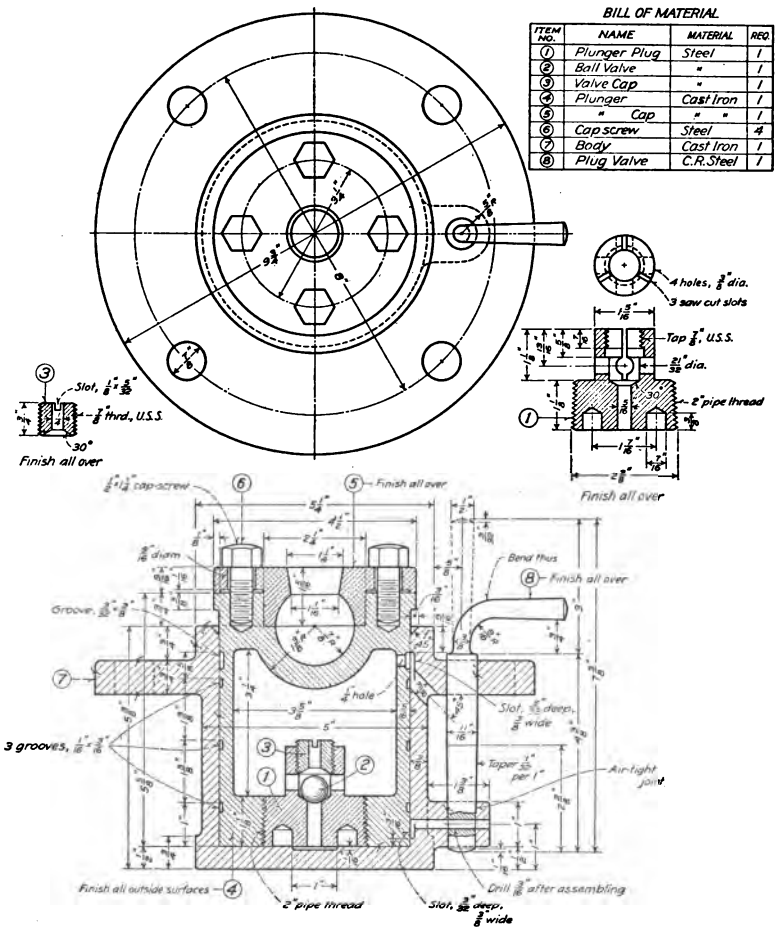

FIG. 439.—Prob. 54.

their purposes. Make a sketch showing the relative positions of the parts when assembled, but with only the important reference dimensions. Sketch each detail, and add dimensions and complete notes. From these sketches make detail drawings without further reference to the machine. Make an assembly drawing without dimensions but with parts numbered to show their location.

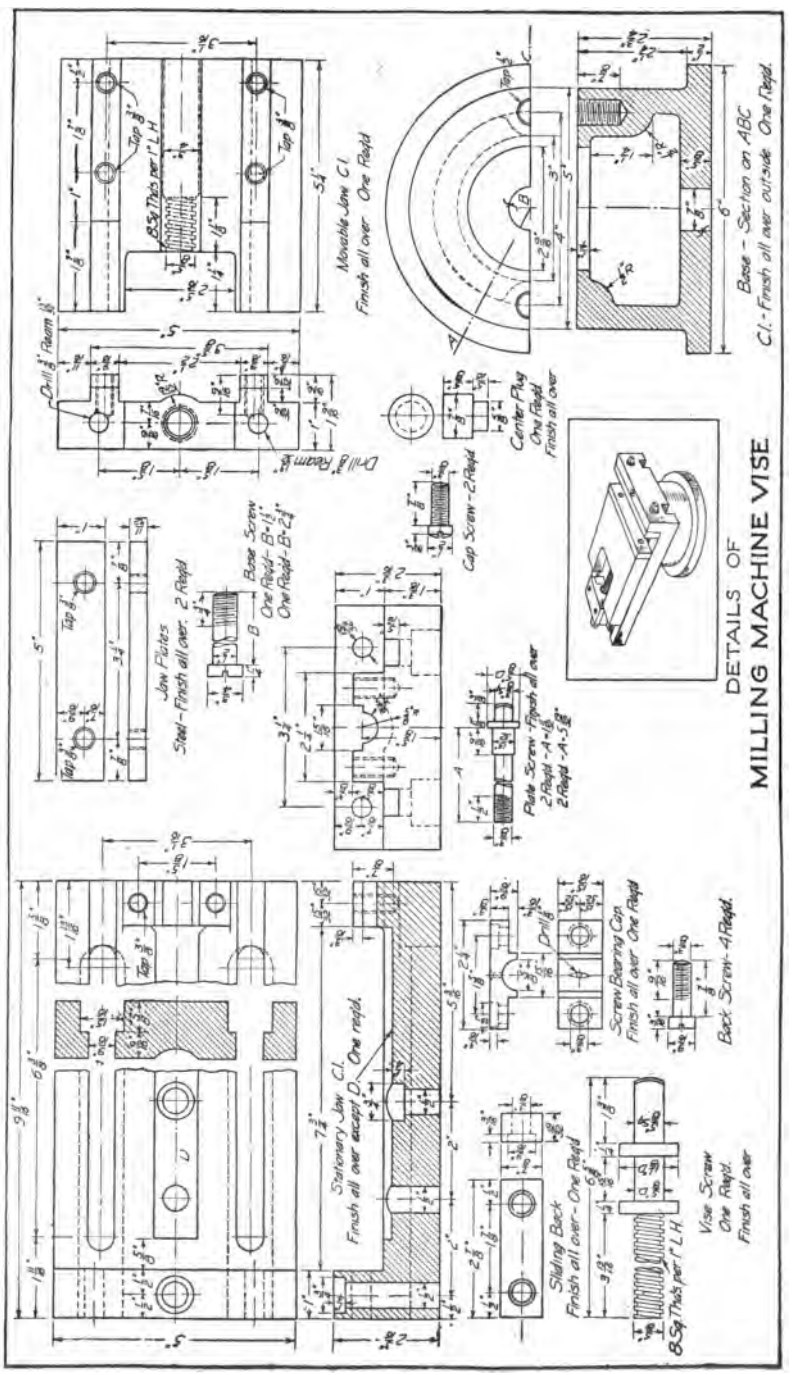

Fig. 440.—Prob. 55.

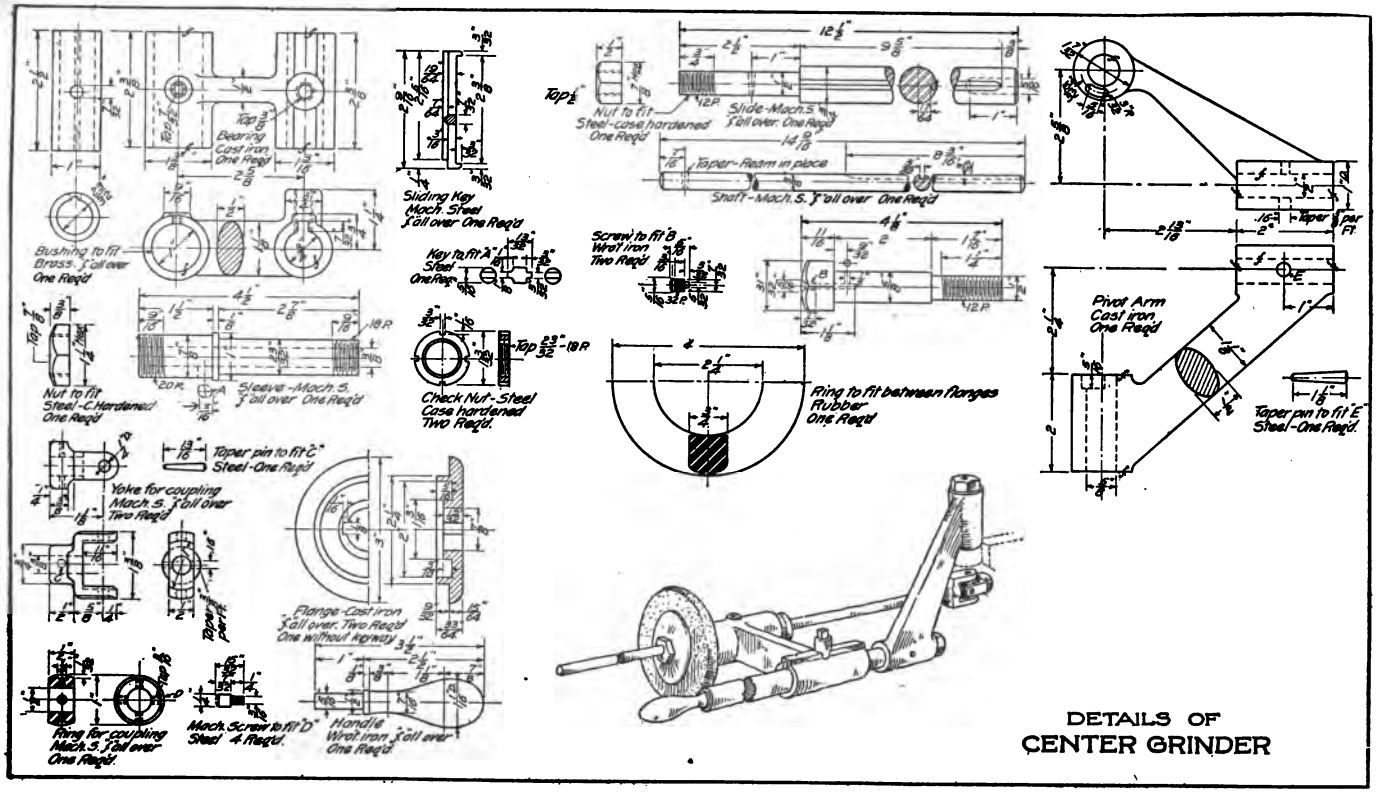

FIG. 441.—Prob. 56.

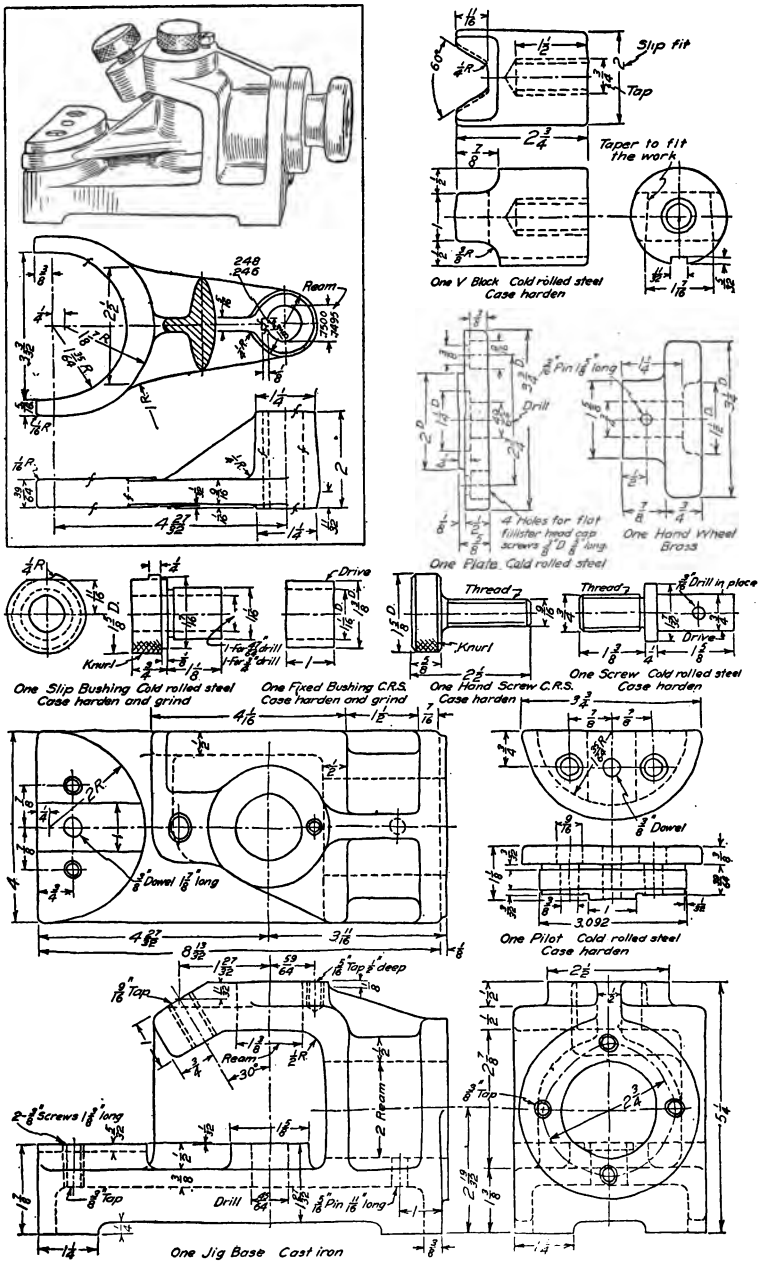

FIG. 442.—Probs. 57 and 58.

CHAPTER XI

Technical Sketching

From its long use in connection with art the word "sketch" has come to suggest the impression of a free or incomplete or careless rendering of some idea, or some mere note or suggestion for future use. This meaning is entirely misleading and wrong in the technical use of the word. A sketch is simply a working drawing made freehand, without instruments, the quick expression of graphic language, but in information adequate and complete.

Purpose.—So necessary to the engineer is the training in freehand sketching, it might almost be said in regard to its importance that the preceding ten chapters have all been in preparation for this one. Such routine men as tracers and detailers may get along with skill and speed in mechanical drawing, but the designer must be able to sketch his ideas with a sure hand and clear judgment. In all mechanical thinking in invention, all preliminary designing, all explanation and instructions to draftsmen freehand sketching is the mode of expression.

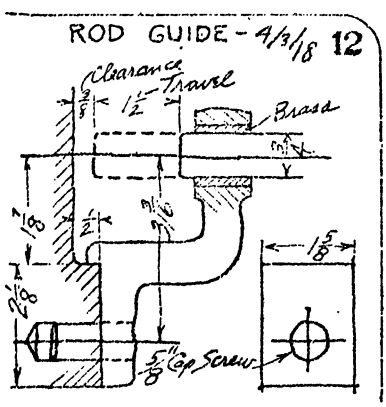

Fig. 443.—A note book sketch.

It represents the mastery of the language, gained only after full proficiency in mechanical execution, and is the mastery which the engineer, and inventor, designer, chief draftsman, and contractor, with all of whom time is too valuable to spend in mechanical execution, must have.

It may be necessary to go a long distance from the drawing room to get some preliminary information and the record thus obtained would be valueless if any detail were missing or obscure. Mistakes or omissions that would be discovered quickly in

making an accurate scale drawing may easily be overlooked in a freehand sketch, and constant care must be observed to prevent their occurrence. A part of a page from a sketch book is shown in Fig. 443 giving the essential information for the design of a guide to be added to a machine.

Sometimes, if a piece is to be made but once a sketch is used as a working drawing and afterward filed.

Practice.—The best preliminary training for this work is the drawing in the public schools, training the hand and eye to see and represent form and proportion. Those who have not had this preparation should practice drawing lines with the pencil, until the hand obeys the eye to a reasonable extent.

Sketches are made in orthographic, axonometric, or perspective drawing, depending upon the use which is to be made of them. Sketches of machine parts to be used in making working drawings, etc., would be made in orthographic; explanatory or illustrative sketches might be made either in orthographic or in one of the pictorial methods.

The best practice is obtained by sketching from castings, machine parts, or simple machines, and making working drawings from the sketches without further reference to the object. In class work a variation may be introduced by exchanging the sketches so that the working drawing is made by another student. This emphasizes the necessity of putting down all the information and not relying on memory to supply that missing; and working with the idea that the object is not to be seen after the sketch is made. A most valuable training in the observation of details is the sketching from memory a piece previously studied. It is an excellent training in sureness of touch to make sketches directly in ink, perhaps with fountain pen.

Materials and Technic.—The only necessary materials for sketching are a pencil (H or 2H), sharpened to a long conical point, not too sharp, a pencil eraser, to be used sparingly, and paper, either in note book, pad or single sheet clipped on a board.

In making working sketches from objects a two-foot rule and calipers are needed to obtain dimensions. In addition to these, other machinists' tools may be required, such as a try square, surface gauge, depth gauge, thread gauge, and for accurate measurements a micrometer caliper. Sometimes a plumb line is of service. Much ingenuity is often required to get dimensions from an existing machine.

The pencil should be held with freedom, not close to the point, vertical lines drawn downward, Fig. 444, and horizontal lines from left to right, Fig. 445.

FIG. 444.—Sketching a vertical line.

Making a Sketch.—In making an orthographic sketch the principles of projection and all the rules of practice for working drawings are to be remembered and applied. The object should be studied and the necessary views decided upon. These views will probably not be just the same as would be made in a scale drawing. For example, a note in regard to thickness or shape of section will often be used to save a view, Fig. 446. The end view of a piece circular in cross section would be entirely unnecessary (as Fig. 449 illustrates). In other cases additional views, part views and extra sections may be sketched rather than complicate the figures by added lines which would confuse a sketch, although the same lines might be perfectly clear in a scale drawing. Use judgment in the size of sketches. Have them large enough to show all detail clearly, allowing plenty of room for dimensions, notes and memoranda. Small parts are often sketched larger than full size, although working drawings are not made over full size except for very small pieces. Do not attempt to crowd all the views on a single sheet of paper; use as many as may be

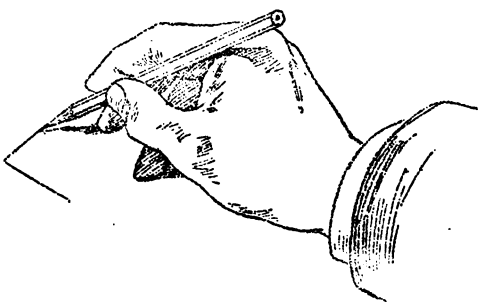

FIG. 445.—Sketching a horizontal line.

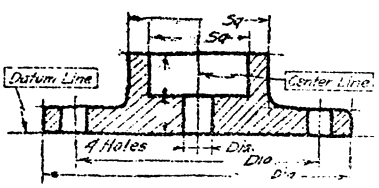

FIG. 446.—A one view sketch.

required, but name each view and indicate the direction in which it is taken in reference to the other views.

In beginning a sketch always start with center lines or datum lines, and remember that the view showing the contour or characteristic shape is to be drawn first. This is generally the view showing circles if there are any.

In drawing on plain paper, the location of the principal points, centers, etc., should be marked so that the sketches will fit the sheet, and the whole sketch with as many views, sections and auxiliary views as are necessary to describe the piece, drawn *without taking any measurements*, but in as nearly correct proportion as the eye can determine.

A machine should, of course, be represented right side up, *i.e.*, in its natural working position. If symmetrical about an axis, often one-half only need be sketched. Circles may be drawn with some accuracy by marking on the center lines points equidistant from the center.

If a whole view cannot be made on one page it may be put on two, each being drawn up to a break line used as a datum line.

Sketches should be made entirely freehand, no ruled lines being used.

Dimensioning a Sketch.—After the sketching of a piece is entirely finished it should be gone over and dimension lines for all the dimensions needed for the construction added, drawing extension lines and arrow heads carefully and checking to see that none are omitted, but still *making no measurements*. Fig. 446.

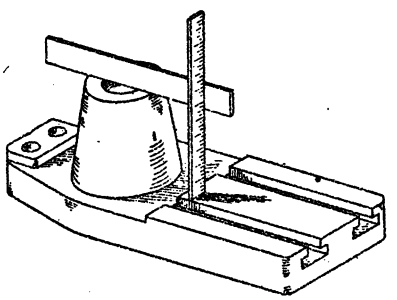

FIG. 447.—Taking a measurement.

Measuring.—Up to this stage the object has not been handled and the drawing has been kept clean. The measurements for the dimensions indicated on the drawing may now be added. The two-foot rule or a steel scale will serve for most dimensions. Never use the draftsman's scale for measuring castings. Its edge will be marred and it will be soiled. The diameters of holes may be measured with the inside calipers. It is often necessary to lay a straight edge across a surface as in Fig. 447. In measuring the distance between centers of two

holes of the same size measure from edge to corresponding edge. Always measure from finished surfaces if possible. Judgment must be exercised in measuring rough castings so as not to record inequalities due to the foundry. Fig. 448 illustrates measuring a curve by offsets.

It is better to have too many dimensions rather than too few. It is a traditional mistake of the beginner to omit a vital figure.

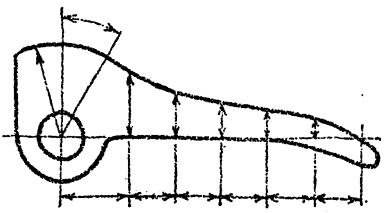

FIG. 448.—Measurements by offsets.

Add all remarks and notes that may seem to be of any value.

The title should be written or lettered on the sketch, and for class sketches the amount of time spent.

Always date every sketch. Valuable inventions have been lost through the inability to prove priority, because the first sketches had not been dated. In commercial work the draftsman's notebook with sketches and calculations is preserved as a permanent record, and sketches should be made so as to stand the test of time, and be legible after the details of their making have been forgotten.

Cross Section Paper.—Sketches are often made on coördinate paper ruled faintly in sixteenths eighths or quarters of an inch, using it either simply as an aid in drawing straight lines and judging proportions, or by assigning suitable values to the unit spaces and drawing to approximate scale, Fig. 449. The latter use is more applicable to design sketches than to sketches from the object.

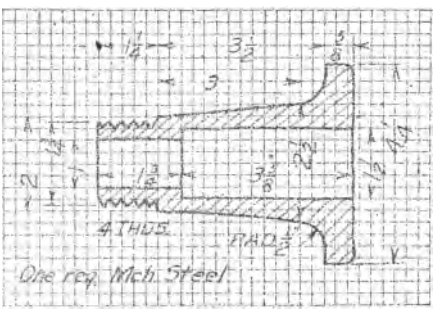

FIG. 449.—Sketch on coördinate paper.

Kinds of Technical Sketches.—Sketches may be divided into two general classes, first, those made before the structure is built, second, those made after the structure is built. In the first class are included the sketches made in connection with the designing of the structure, and might be classified as (1) *Schem-*

ing or "idea" *sketches*, used in studying and developing the arrangement and proportion o parts. These are followed by (2) *Compu at on sketches*, made in connection with the figured calculat ons for motion and strength. (3) *Executive sketches*, made by the ch ef engineer, inventor or consulting engineer to give instructions for special arrangements or deas which must be embodied in the design. (4) *Design sketches*, used in working up the schemes and ideas in such form that the design drawing can be started. (5) *Working sketches*, made as substitutes for working drawings.

The second class includes (1) *Detail sketches*, made from existing parts, with complete notes and dimensions, from which duplicate

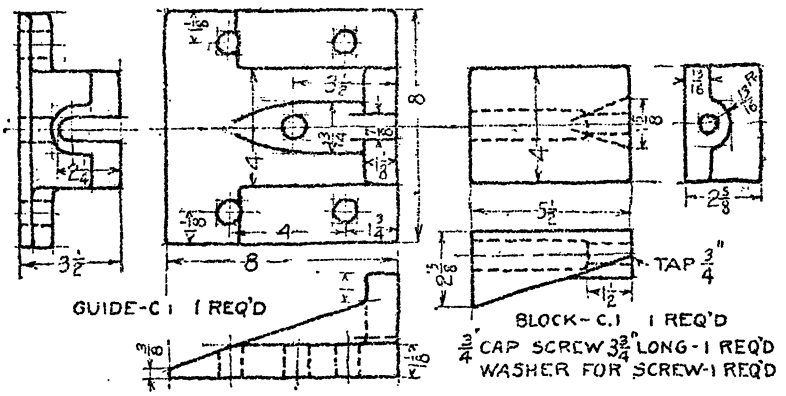

FIG. 450.—Detail sketch.

parts may be made directly, or from which mechanical drawings may be made, Fig. 450. The method of making these sketches has already been discussed. (2) *Assembly sketches*, made from an assembled machine to show the relative positions of the various parts, with center and location dimensions, or sometimes for a simple machine with complete dimensions and specifications. (3) *Outline or diagrammatic sketches*. These are generally made for the purposes of location, sometimes to give the size and location of pulleys and shafting, piping or wiring, for use in connection with setting up of machinery; sometimes to locate a single machine, giving the overall dimensions, sizes and center distances for foundation bolts, and location and sizes of pulleys, piping, etc.

SKETCHING BY PICTORIAL METHODS.—The pictorial sketch of an object or of some detail of construction will often explain it when the orthographic projection cannot be read in-

telligently by a workman. If a working drawing is difficult to understand, one of the best ways of reading it is to start a pictorial sketch of it. Usually before the sketch s finished the orthographic drawing is perfectly clear. Often, again, a pictorial sketch may be made more quickly and serve as a better record than orthographic views of the same piece would do; and the draftsman who can make a pictorial sketch with facility will find abundant opportunity for its advantageous use.

The three pictorial methods are axonometric, oblique, and perspective. The first two have been explained in detail in Chapter VIII and their application in sketching referred to on page 134.

Axonometric Sketching.—Since measurements are not made on sketches there is absolutely no advantage in sketching on

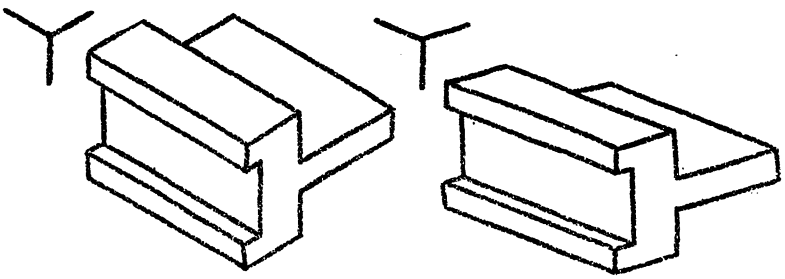

FIG. 451.—120° axes and flattened axes compared.

isometric axes 120 degrees apart and making an unnecessary distortion. A much better effect is gained and the distortion greatly lessened by drawing the cross axes at a much smaller angle with the horizontal, Fig. 451, and foreshortening them until satisfactory to the eye. It is legitimate in such an isometric sketch still further to decrease the effect of distortion by slightly converg ng the receding lines. Objects of rectangular outline are best adapted to sketching in axonometric projection.

When t is important to show the top surface the axes may be drawn at greater angles to the horizontal, and the vertical axis foreshortened, thus tipping the object forward.

Some care must be exercised in adding dimensions to a pictorial sketch. The extension lines must always be either in or perpendicular to the plane on which the dimension is being given. Fig. 452. (See also Figs. 164 to 171.)

Oblique Sketching.—The advantage of oblique projection in preserving one face without distortion is of particular value in

sketching, and the painful effect of this kind of drawing done mechanically may be greatly lessened in sketching, by foreshortening the cross axis to a pleasing proportion, Fig. 453. By converging the lines parallel to the cross axis, the effect of parallel perspective is obtained. This converging in either isometric or oblique is sometimes called "fake perspective."

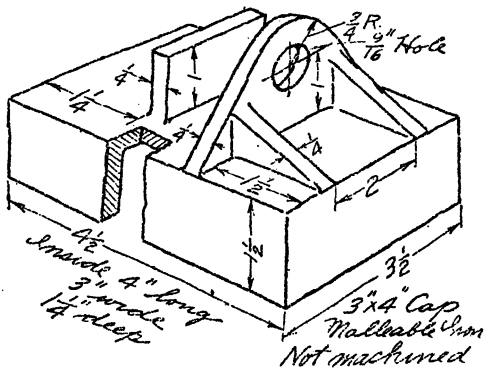

FIG. 452.—Pictorial sketch.

Perspective Sketching.—A sketch made in perspective will of course give the best effect pictorially. As we do not in this book take up the subject of mechanical perspective, with its rules and

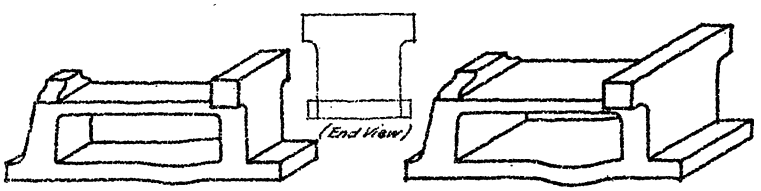

FIG. 453.—Oblique, with and without foreshortening.

methods, only the phenomena of perspective and their application in freehand sketching can be considered in this connection.[1]

[1] *Perspective Construction.*—Some knowledge of mechanical perspective is of great aid in freehand sketching. This note gives a condensed statement of the principles. Titles of several books on the subject will be found in Chapter XVIII.

When a perspective drawing is to be constructed from the plan and elevation, a picture plane is imagined as set up in front of the object, and the observer's eye located at a "station point" at a distance from the plane at least twice the length of the object. A little thought will show that the vanishing point for any system of parallel lines is the conical projection on the picture plane of their infinite ends, the eye looking farther and farther out until the line of vision is parallel to the given lines, Hence *the vanishing point for any system of parallel lines is found by drawing from the station point a line parallel to the given lines and finding where it pierces the picture plane.* A line drawn from the station point perpendicular to the picture plane pierces it in a point called the "center of vision." Evidently

Perspective has already been defined as being the representation of an object as seen by the eye from some particular station

all lines perpendicular to the picture plane will vanish in the center of vision. This is the basis of parallel perspective.

An object with one face in the picture plane, to be drawn in parallel

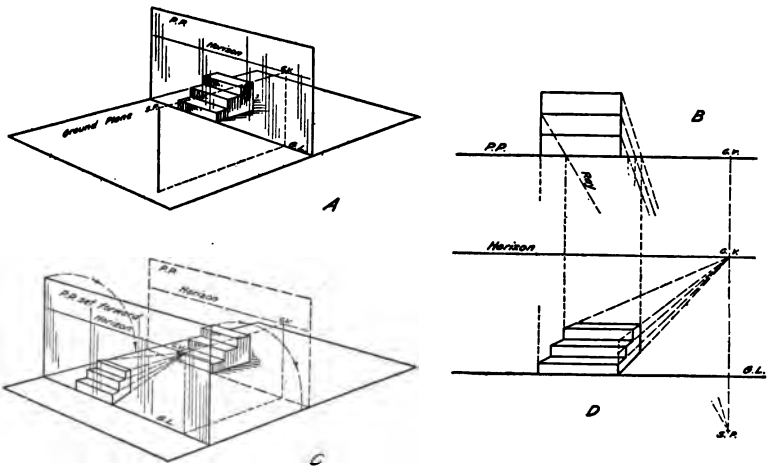

FIG. 454.—Parallel perspective.

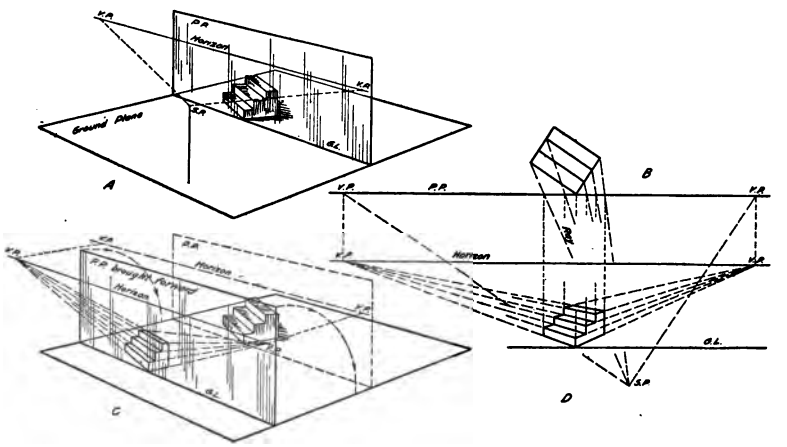

FIG. 455.—Angular perspective.

perspective as it would appear from S.P. is shown at *A*, Fig. 454. At *B* is shown the top view of *A* with the cone of rays. *C* shows the picture plane detached and set forward in order that it may not interfere with the plan when revolved. *D* is the top view of *C* after the picture plane has been revolved, and represents (with *B*) the construction that would be made in

point. Geometrically, it is the intersection of the cone of rays from the eye to the object, with the vertical plane, or "picture plane." There is a distinction between "artist's perspective" and "geometrical perspective," in that the artist draws the object as he sees it projected on the spherical surface of the retina of his eye, while geometrical, or mechanical perspective is projected on a plane, as in a photograph, but except in wide angles of vision the difference is not very noticeable.

The ordinary phenomena of perspective, affecting everything we see, the fact of objects appearing smaller in proportion to their distance from the eye, and of parallel lines appearing to converge as they recede, are of course well known.

The outline of the object in Fig. 457 is drawn from a photograph. It will be noted that the vertical lines remain vertical in the picture, and that the two sets of horizontal lines each appear to converge toward a point called the "vanishing point." These two vanishing points will lie on a horizontal line drawn at

---

a perspective drawing. Thus, to draw an object in parallel perspective by the "cone of rays" method, draw the plan parallel to P.P. From each point of the plan draw a ray to S.P. At any convenient place draw a horizon and below it (5 feet) a ground line. As all lines perpendicular to P.P. vanish at C.V. the perspective of any point would be found by finding the perspective of a perpendicular containing it and dropping a perpendicular to this line from the point of intersection with P.P. of the ray through the point.

Vertical measurements are made on measuring lines in the picture plane and "vanished" back to the line to be measured.

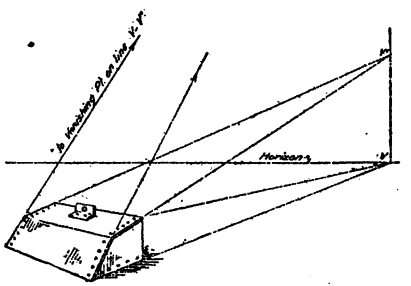

FIG. 456.—Vanishing point of oblique lines.

Fig. 455 is a series illustrating an object in angular perspective, *A*, the object, with one corner in the picture plane; *B* the plan showing the finding of the vanishing points for the two series of horizontal lines by drawing lines through the station point parallel to them; *C* the picture plane moved forward bringing with it the horizon and vanishing points; *D*, the picture plane revolved. *B* and *D* together illustrate the layout for an angular perspective drawing. The figure illustrates the general case. It is usual in practice to take S.P. directly in front of the corner in the P.P.

Fig. 456 illustrates the principle that the vanishing point of a system of oblique lines is on a perpendicular from the vanishing point of their projections.

the level of the eye, called the "horizon;" and the first rule is, *all horizontal lines vanish on the horizon.*

When the object is turned as in Fig. 457, with its vertical faces at an angle with the picture plane, the drawing is said to be in angular perspective. It is sometimes called "two-point" perspective because of having two vanishing points.

If the object is turned so that one face is parallel to the picture plane, the horizontal lines on that face and all lines parallel to them would remain horizontal in the picture and would thus have no vanishing point. The object drawn in this position is said to be in parallel, or "one-point" perspective.

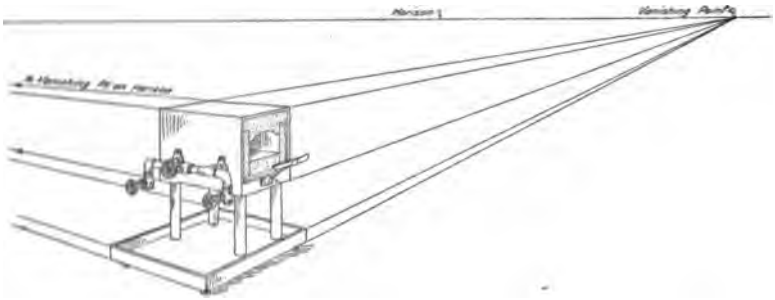

FIG. 457.—Perspective (from photograph).

In sketching in perspective from the model the drawing is made simply by observation, the directions and proportionate lengths of lines being estimated by sighting and measuring on the pencil held at arm's length; and knowledge of the geometrical rules and principles used only as a check.

With the drawing board or sketch pad held *perpendicular* to the "line of sight" from the eye to the object, the direction of a line is tested by holding the pencil at arm's length *parallel to the board*, rotating the arm until the pencil appears to coincide with the line on the model, then moving it parallel to this position, back to the board.

The apparent lengths of lines are estimated in the same way, holding the pencil in a plane perpendicular to the line of sight, marking with the thumb the length of pencil which covers a line of the model, rotating the arm, with the thumb held in position, until the pencil coincides with another line, and estimating the proportion of this measurement to the second line, Fig. 458.

The sketch should be made lightly, with free sketchy lines, and no lines erased until the whole sketch has been blocked in.

Do not make the mistake of getting the sketch too small.

In starting a sketch from the object, set it in a position to give the most advantageous view and sketch the directions of the principal lines, running the lines past the limits of the figure. Block in the enclosing squares for all circles and circle arcs and proceed with the figure, drawing the main outlines first and adding details later. Then

FIG. 458.—Estimating proportion.

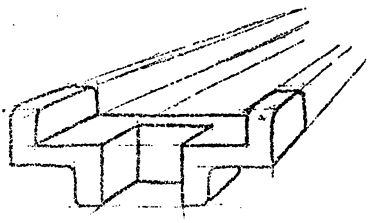

FIG. 459.—Parallel perspective sketch.

brighten the sketch with heavier lines A good draftsman often adds a few touches of surface shading, to aid in reading; the beginner should not attempt this.

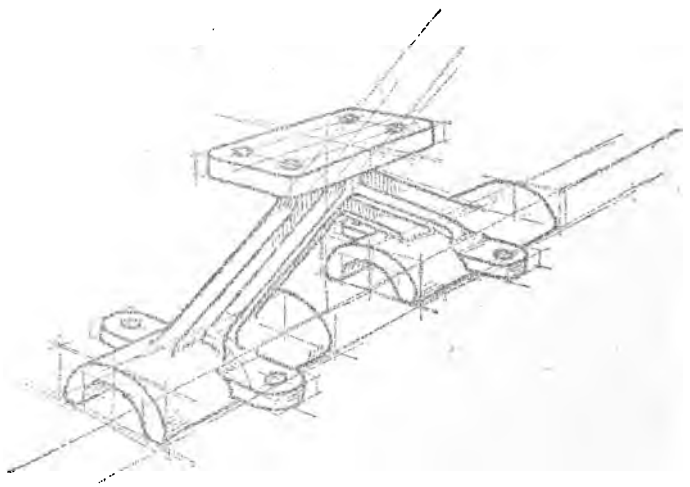

FIG. 460.—Angular perspective sketch.

Fig. 459 shows the general appearance of a "one-point" perspective sketch before the construction lines have been erased. Fig. 460 is a sketch in angular perspective with inclined lines.

PROBLEMS

As mentioned at the beginning of this chapter, the best practice is to be had in sketching from models. The problems below are given for use where models are not convenient. To be of value they must be done carefully, and with attentive supervision by the instructor. They should be made to fill a 7″ × 10″ space.

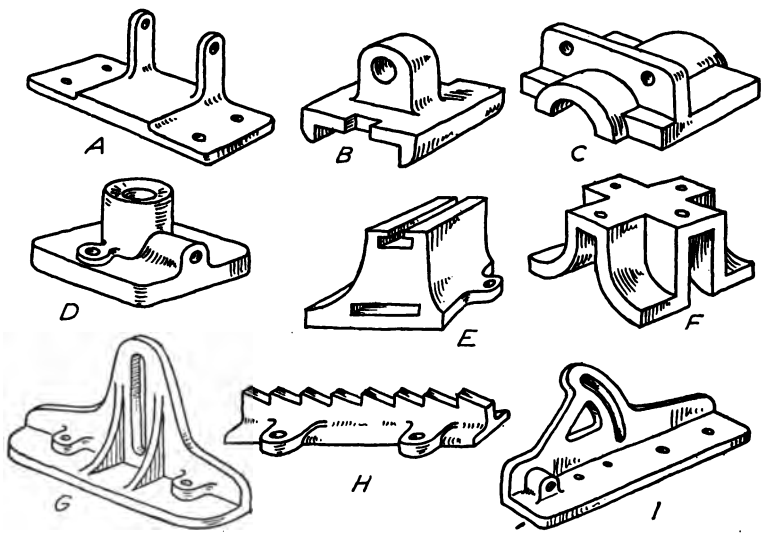

FIG. 461.—Probs. 1 to 9.

Group I. Orthographic Sketches of Details.

1 to 9. Fig. 461. Sketch the necessary views without dimensions.

10 to 17. Figs. 164 to 171. Make working sketches with dimensions.

Group II. Pictorial Sketches.

18 to 24. Sketch Figs. 182, 185, 191, 194, 176–177 in suitable pictorial method and add dimensions.

25. Make sketch of a chamfered hex nut for 2″ bolt.

26. Make sketch of rounded hex nut for 2″ bolt.

Group III. Assembly and Detail Sketches.

27. Make sectional assembly sketch of mold for piston washer, Fig. 402.

28. Make assembly sketch of leveling block, Fig. 450.

29. Make assembly sketch of tool post, Fig. 415.

30. Make detail working sketches of each part of expansion joint, Fig. 347.

31. Same as 30, for Fig. 439.

32. Make outline assembly sketch (without dimensions) of shaft straightener, Figs. 433, 434.

Other figures may be used for sketching purposes, particularly the problems of Chapter VIII.

CHAPTER XII

The Elements of Structural Drawing

Structural drawings differ from other drawings only in certain details and practices which have developed as peculiar to the materials worked with and their method of fabrication. The differences are so well established that it is essential for the engineer to know something of the methods of representation in use in structural work.

Steel structures are made up of "rolled shapes" put together permanently with rivets. The function of a structural drawing is to show the shapes and sizes used and the spacing of rivets. The names and dimensions of standard steel shapes, together with much other information with which the structural draftsman must be familiar, are given in the various structural steel handbooks. For wooden structures where the parts are not so completely standardized complete details and dimensions of every part are desirable.

Classification.—Professor Ketchum[1] has classified and described the drawings for structures as follows:

1. **General Plan.**—This will include a profile of the ground; location of the structure; elevations of ruling points in the structure; clearances; grades; (for a bridge) direction of flow, high water, and low water; and all other data necessary for designing the substructure and superstructure.

2. **Stress Diagram.**—This will give the main dimensions of the structure, the loading, stresses in all members for the dead loads, live loads, wind loads, etc., itemized separately; the total maximum stresses and minimum stresses; sizes of members; typical sections of all built members showing arrangement of material, and all information necessary for the detailing of the various parts of the structure.

3. **Shop Drawings.**—Shop detail drawings should be made for all steel and iron work and detail drawings of all timber, masonry and concrete work.

4. **Foundation or Masonry Plan.**—The foundation or masonry plan should contain detail drawings of all foundations, walls, piers, etc., that support the structure. The plans should show the loads on the foundations; the depths of footings; the spacing of piles where used; the proportions for the concrete;

[1] Structural Engineers' Handbook by Milo S. Ketchum.

the quality of masonry and mortar; the allowable bearing on the soil, and all data necessary for accurately locating and constructing the foundations.

5. **Erection Diagram.**—The erection diagram should show the relative location of every part of the structure; shipping marks for the various members; all main dimensions; number of pieces in a member; packing of pins; size and grip of pins, and any special feature or information that may assist the erector in the field. The approximate weight of heavy pieces will materially assist the erector in designing his falsework and derricks.

6. **Falsework Plans.**—For ordinary structures it is not common to prepare falsework plans in the office, this important detail being left to the erector in the field. For difficult or important work erection plans should be worked out in the office, and should show in detail all members and connections of the falsework, and also give instructions for the successive steps in carrying out the work. Falsework plans are especially important for concrete and masonry arches and other concrete structures, and for forms for all walls, piers, etc. Detail plans of travelers, derricks, etc., should also be furnished the erector.

7. **Bills of Material.**—Complete bills of material showing the different parts of structure with its mark, and the shipping weight should be prepared. This is necessary in checking up the material to see that it has all been shipped or received, and to check the shipping weight.

8. **Rivet List.**—The rivet list should show the dimensions and number of all field rivets, field bolts, spikes, etc., used in the erection of the structure.

9. **List of Drawings.**—A list should be made showing the contents of all drawings belonging to the structure.

General Drawings.—The general drawings correspond in many respects to the design drawings and assembly drawings of the mechanical engineer, and include the general plan, stress diagram and erection diagram. In some cases the design drawing is worked out completely by the engineer, giving the sizes and weights of members and the number and spacing of all rivets. In other cases the general dimensions, positions and sizes of the members and the number of rivets is shown, leaving the details to be worked out in the shop or to be given on separate complete detail shop drawings.

In order to show the details clearly the structural draftsman often uses two scales in the same view, one for the center lines or skeleton of the structure, showing the shape, and a larger one for the parts composing it. The scale used for the skeleton is determined by the size of the structure as compared to the sheet; $\frac{1}{4}''$, $\frac{3}{8}''$ and $\frac{1}{2}''$ to one foot are commonly used. Shop details are made $\frac{3}{4}''$, $1''$ or $1\frac{1}{2}''$, and for small details $3''$ to the foot.

Fig. 462 is a typical drawing of a small roof truss, giving complete details. Such drawings are made about the working lines

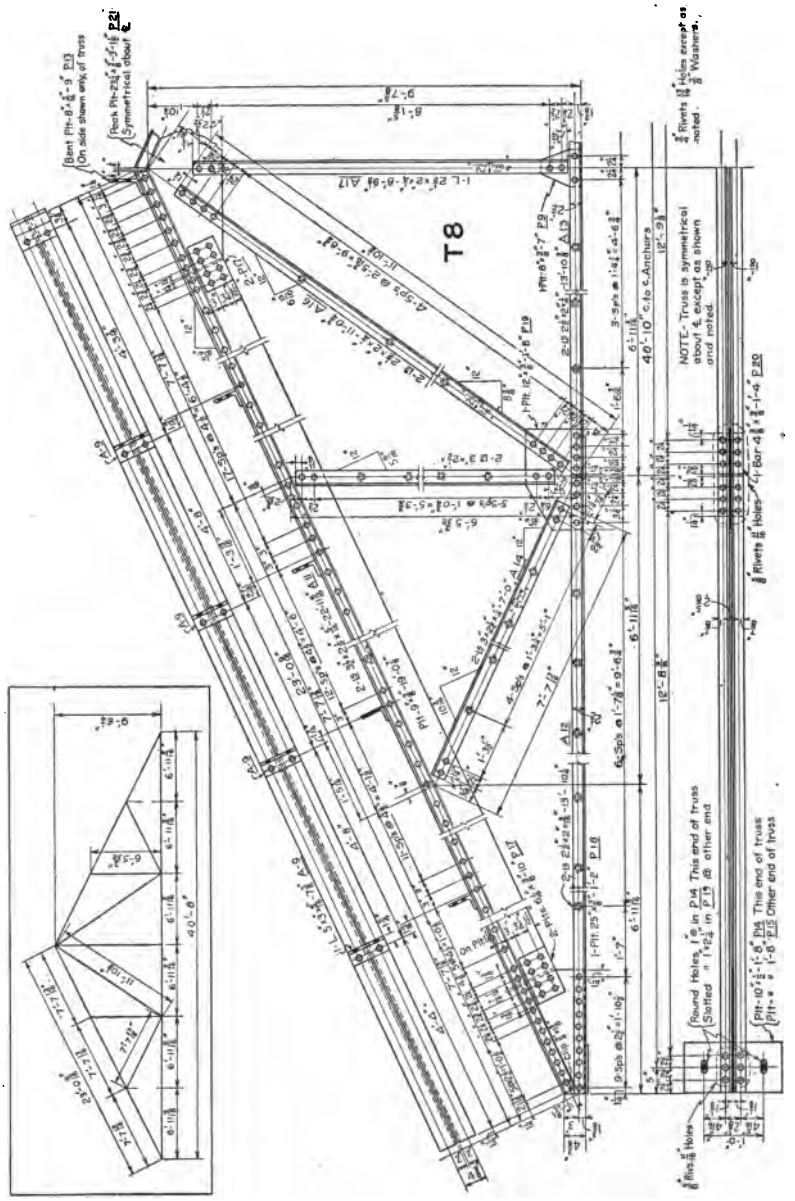

FIG. 462.—Structural working drawing—Roof truss.

which were used in calculating the stresses and sizes of the members. These lines form the skeleton, as illustrated separately to small scale in the "box" on the figure. The length of each working line is figured accurately and from it the intermediate dimensions are obtained.

The erection diagram is often put on the same sheet as the truss.

When one-half of a truss only is shown it is always the left-hand end, looking toward the side on which the principal connections are made.

Detail Drawings.—Separate drawings made to a sufficiently large scale to carry complete information are called shop detail drawings. All parts are shown to scale, noting particularly that rivets and rivet heads are drawn accurately to scale. When possible all members are shown in the position which they will occupy in the completed structure, vertical, horizontal or inclined. Long vertical or inclined members may be drawn horizontally, a

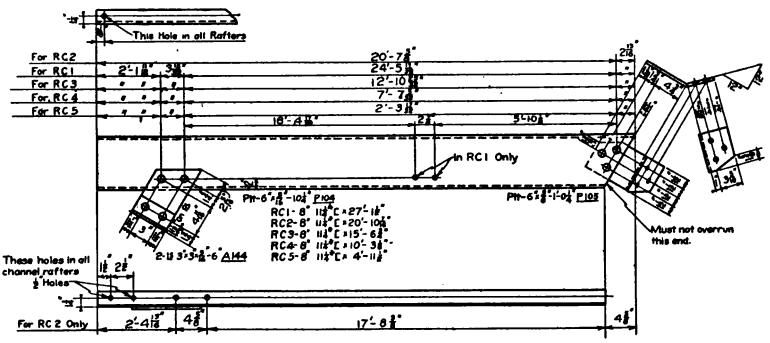

FIG. 463.—Beam detail.

vertical member always having its lower end at the left, and an inclined member drawn in the direction it would fall. Except in plain building work a diagram to small scale showing by a heavy line the relative position of the member in the structure, should be drawn on every detail sheet.

Fig. 463 is a beam detail, giving all the information for five different beams in one drawing, and illustrating the method of representing a bent plate. It is obvious that in such a drawing the lengths are not to scale.

Structural Drawing Practice.—The standard size of sheet for structural drawings is 24″ × 36″ outside, with a half-inch border.

In a number of drafting rooms a second half-inch border is drawn inside and the first one used as the trimming line for blue prints. Inked outlines should be of sufficient weight to make the main material stand out distinctly, while dimension lines and gage lines are made in very fine full lines in black. Some prefer red ink for dimension and gage lines. This makes the tracing somewhat easier to read, but the prints are not so satisfactory, and red ink is not permanent. When new work is to be attached to old, the old is often drawn in red.

Dimensions are always placed over the line instead of in the line. Dimensions of 10 inches and over are given in feet and inches thus 0′–10″, 1′–2½″. Care should be taken that dimensions are given to commercial sizes of materials. Sizes of members are specified by figures parallel to them, as 2Ls 2½ × 2 × ¼ × 7′–3″ which means two angles having legs of 2½″ and 2″, ¼″ thick and 7′–3″ long. Angle or bevel cuts, as for gussets are indicated by their tangents on a 12″ base line. See Fig. 462. *Checking* is usually indicated by a dot in red ink placed under the dimension. Elevations, sections and other views are placed by the theory of third angle projection except that when a view is given under a front view, as in Figs. 462 and 463 it is made as a section taken above the lower flange, looking down, instead of as a regular bottom view looking up. Large sections of materials are shown with uniform cross hatching. Small scale sections are blacked in solid, leaving white spaces between adjacent pieces.

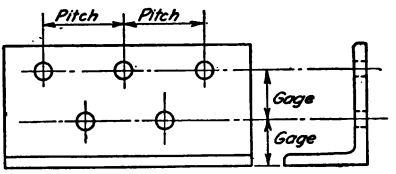

FIG. 464.

Rivets are spaced along "gage lines," measured from the backs of angles and channels and from center to center on I beams. Fig. 464. The distance between rivets measured along the gage line is called the pitch.

The size of most structures prevents their being completed in the shop so they are "fabricated" as large as transportation facilities allow, and the necessary connections made where the structure is erected. The holes for these "field rivets" are always indicated in solid black to scale on the drawing, while shop rivets are indicated by circles of the diameter of the rivet head.

A bill of field rivets is always furnished. In drawing rivets the drop pen, Fig. 21, is a favorite instrument.

Fig. 465 shows the Osborn symbols for riveting, which are so

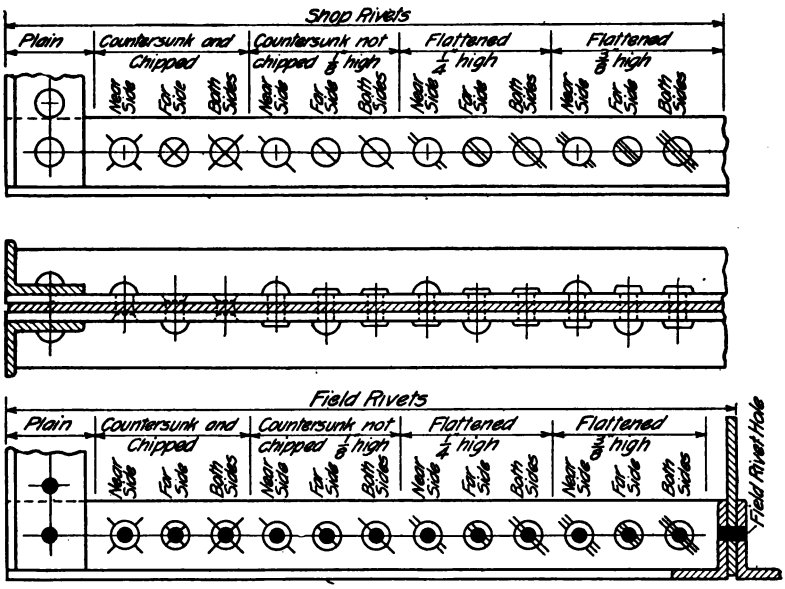

FIG. 465.—Osborn rivet symbols.

universally used that no key on the drawing is necessary. Fig. 466 shows rivets to larger scale.

Bent plates should be developed and the "stretchout" length of bent forged bars given. The length of a bent plate may be taken as the inside length of the bend plus half the thickness of the plate for each bend.

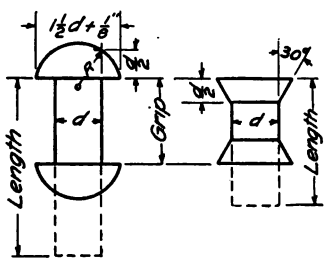

FIG. 466.

A bill of material always accompanies a structural drawing. This may be put on the drawing but the best practice is to attach it as a separate "bill sheet" generally on 8½ × 11 paper.

Each member of a structure is given a shipping mark consisting of a capital letter and a number, which appears on the drawings and on the bill sheet. See Figs. 462 and 463.

Lettering is done in rapid single stroke either inclined or vertical. An example of a printed title form is given in Fig. 467.

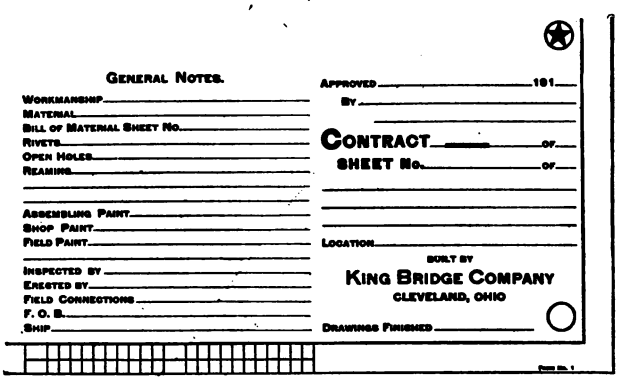

FIG. 467.—A printed title form.

Timber Structures.—The representation of timber-framed structures involves no new principles, but requires particular attention to details. Timber members are generally rectangular

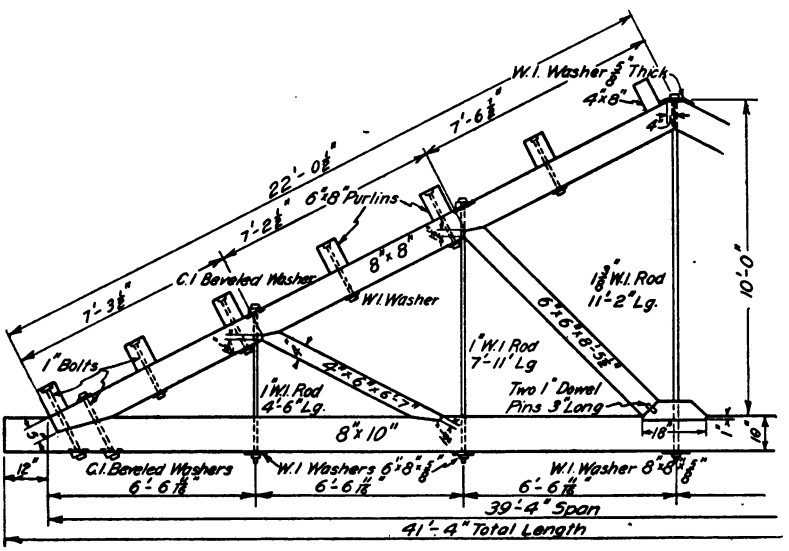

FIG. 468.—Timber truss drawing.

in section and are specified to nominal sizes in even inches, as $8'' \times 12''$. As nominal sizes are generally larger than the actual

dimensions the general drawing must give center and other important distances accurately. Details drawn to larger scale give specific information as to separate parts. Sizes of wood members vary so much that nothing should be left to "guess in" when erecting. The particulars of joints, splices, methods of fastening, etc., should be given in full. As this requires a specialized knowledge of wood-framing construction, acquired only through large experience in this class of work, it should not be attempted by the novice.

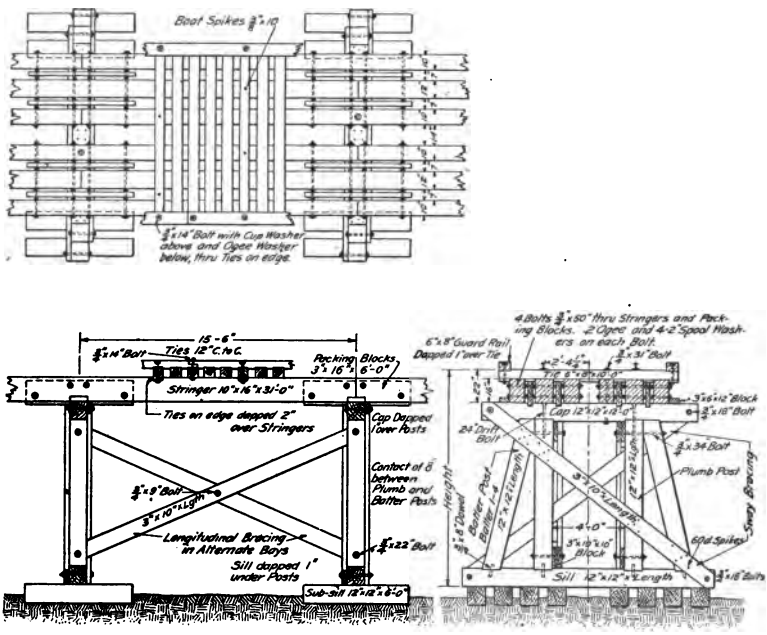

FIG. 469.—Drawing for railroad trestle.

Two scales may sometimes be used to advantage on the general drawing, as was done in Fig. 468.

Fig. 469 shows the construction of a wooden trestle on "mud sills." Timbers of the sizes shown are used for heights up to 20 feet. Complete notes are an essential part of such drawings, especially when an attempt at dimensioning the smaller details would result in confusion.

Masonry Structures.—In drawing masonry the symbols used bear some resemblance to the material represented. Fig. 470

gives those in common use and shows the stages followed to secure uniformity of effect in rendering earth and concrete. An effective method of cross hatching, leaving a white line around the edge of the stone is shown in Fig. 471. Drawings for piers, foun-

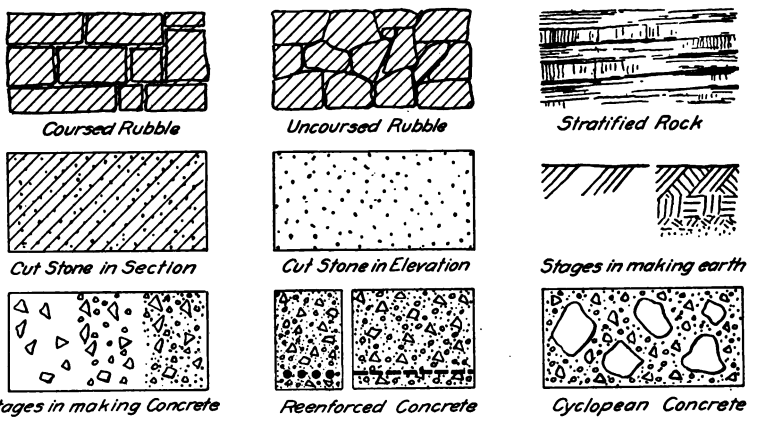

FIG. 470.—Masonry symbols.

dations for machines and other structures are met with in all kinds of engineering work. Grade levels, floor levels and other fixed heights should be given, together with accurate location dimensions for foundation bolts. All materials should be marked plainly with name or notes. A pier is illustrated in Fig. 472.

A division of masonry construction of increasing importance, needing careful attention in representation, is **reinforced concrete.** It is almost impossible to show definitely the shapes and positions of reinforcing bars in concrete by the usual orthographic views, without a systematic scheme of marking. In Fig. 473 the various bars are designated by reference letters and numbers on horizontal and vertical center lines. Note the horizontal lines *G* and *F*, and the vertical lines numbered 1, 2, 3, 4, 5. The first bar in the line *G* is called *G*1, the second *G*2, etc., similarly for bars

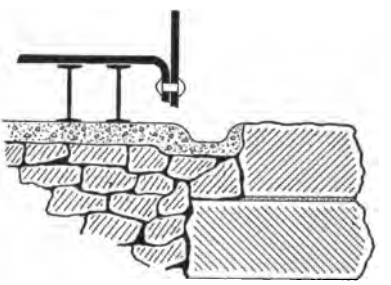

FIG. 471.—Masonry section.

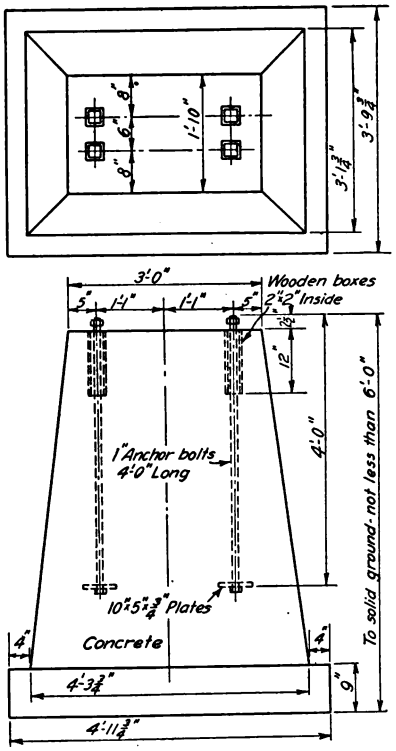

FIG. 472.—Pier drawing.

*F*1, *F*2. Each of the bars is marked with its same combination of letter and figure in the other views, and they are detailed in separate bending diagrams, thus completely defining their location and shape. Sometimes the attempt is made to give bending dimensions in the views of the structure but as this greatly increases the difficulty of reading the drawing, it is not good practice.

The usual symbol for concrete in section is used very commonly for reinforced concrete, adding the reinforcing bar sections in heavy black dots, with dashed or full lines for the bars parallel to the section. This, however, gives a very confused appearance. The reinforcing bars can be

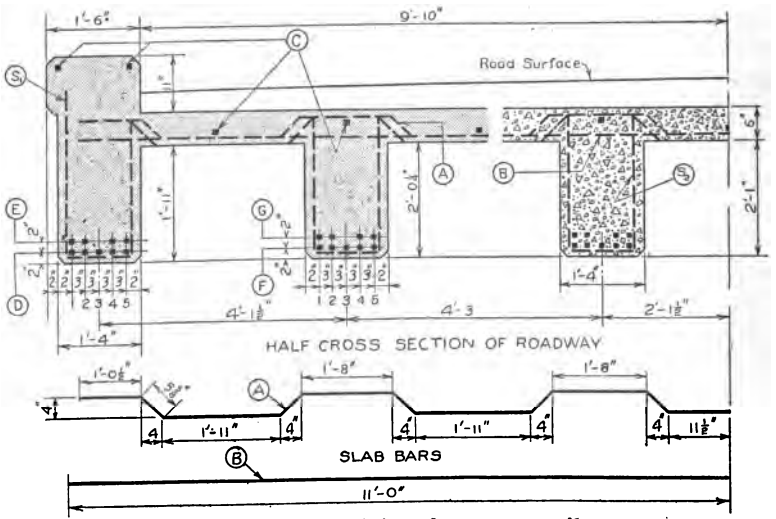

FIG. 473.—Reinforced concrete section.

shown in place much more clearly if the concrete is represented by an even tint instead of using the regular symbol. This tint may be made by section lining in colored ink or in very dilute black ink, or, if the tracing is made on the smooth side of the cloth, by stumping the back with soft pencil. Any of these methods gives a light blue tint on the blue print and enables the details of the reinforcing (which is the important item) to be shown clearly. The two methods are shown side by side in Fig. 473.

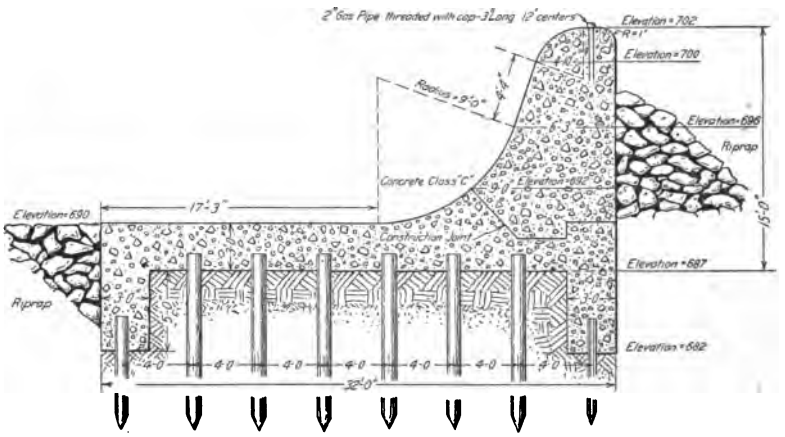

FIG. 474.—Masonry section, weir dam.

Certain classes of engineering structures involve much free-hand rendering, and the ease of reading (usefulness) depends upon the care with which this rendering is done.

The section of a submerged weir, Fig. 474 is an example of this, where there is comparatively little mechanical execution. Any means of "bringing out" the construction, such as surface shading, or use of solid black is legitimate.

CHAPTER XIII

The Elements of Architectural Drawing

It is entirely beyond the scope of this book to take up architectural designing. But in the application by the architect, of engineering drawing as a language, there are idioms and peculiarities of expression with which all engineers should be familiar, as in the interrelation of the professions they are often required to read or work from architects' drawings, or to make drawings for special structures.

Characteristics of Architectural Drawing.—The general principles of drawing are the same for all kinds of technical work. Each profession requires its own special application of these principles, and the employment of particular methods, symbols and conventions. In architectural drawing the necessary smallness of scale requires the general drawings to be made up largely of conventional symbols for the different parts. The necessary notes of explanation and information regarding the details of material and finish are too extensive to be included on the drawings so are written separately and are called the *specifications*. These specifications are regarded as part of the plans, and have equal importance and weight.

Architecture is one of the fine arts, and in the make-up of an architect's drawings there is an evidence of artistic feeling, produced in part by the freehand work and lettering upon them that gives them an entirely different appearance from a set of machine drawings. One peculiarity found in many modern architectural drawings is the tendency to overrun corners. This in an experienced draftsman's work gives a certain snap and freedom, but it must not be taken by the beginner as a license for carelessness. Imitation of it is affectation.

Some architects still adhere to first angle projection. Another distinctively architectural feature is the use of the "reflected view," the drawing, usually a part view, as of a soffit or ceiling, being made as if reflected in a mirror on the ground.

Kinds of Drawings.—Architectural drawings may be divided into three general classes: (1) Preliminary sketches and drawings, (2) display and competitive drawings, (3) working drawings.

Preliminary Sketching.—The architects' designing problems present so many solutions that a great amount of preliminary sketching is necessary, and the architectural draftsman must be facile with the pencil. Schemes are carried on first in very small

FIG. 475.—A pen drawing.

study sketches, not to scale, and afterward worked up enlarging them in sketches to scale. Tracing paper is used largely in this work as one sketch can be made over another, thus saving time in laying out and enabling the preservation of all the different solutions. The final preliminary sketches are submitted to the client, and should give all the general dimensions. In preparing these sketches the important consideration to be kept in mind is that the client is usually a person not accustomed to reading a drawing, and that they must therefore be particularly clear and free from ambiguity. Tracing paper drawings are often mounted for display either by tipping or floating as described on page 300.

Display Drawings.—The object of display drawings is to give a realistic or effective representation of the arrangement and appearance of a proposed building for illustrative or competitive

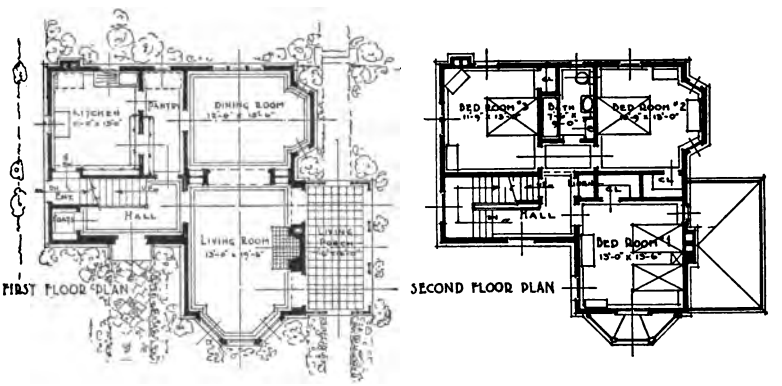

FIG. 476.—A treatment of display plans.

purposes. They may be either plans and elevations, or may include perspective drawings; and contain little or no structural information. For legibility and attractiveness, they are "rendered" generally on Whatman, eggshell, tracing, or other white paper, in water color, pen-and-ink, crayon or pencil, giving the effect of color, or light and shade. Such accessories as figures, adjacent buildings, foliage, etc., are often introduced in elevations and perspective drawings, not so much for pictorial effect as to give *scale*, an idea of the relative size of the building.

PLOT PLAN
FIG. 477.

A pen drawing in perspective, as used in a competition drawing[1] is shown in Fig. 475.

In rendering plans for display or competitive purposes, tints and shadows are often used to show the plan in relief. The terms poché and mosaic are used in this connection, "poché" meaning simply the blackening of the walls to indicate their

[1] Figs. 475, 6 and 7 are from a drawing by Kelly and Lenski. Courtesy of the Upper Arlington Company.

relative importance in the composition, and "mosaic" the rendering in light lines and tints of the floor design, furniture, etc., on the interior, and the walks, drives and planting of the exterior. The first and second floor plans of the house of Fig. 475 are shown in Fig. 476, and the lot plan in Fig. 477.

The architect must be familiar with perspective drawing as he uses it both in the preliminary study of his problem, and in showing his client the finished appearance of the proposed structure. In rendering a perspective, it is best to transfer it by frotté, or rubbing, as described on page 302 in order to preserve the surface of the paper.

Working Drawings.—All the general principles in Chapter X regarding working drawings are applicable to architectural

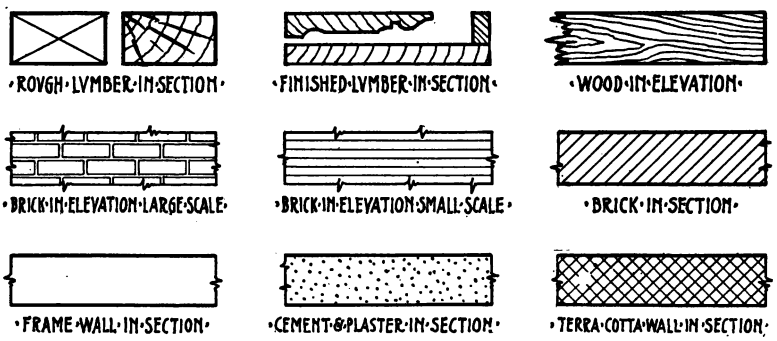

FIG. 478.—Symbols for building materials.

working drawings. The assembly drawings are plans, elevations and sections. The commonest scale used is $\frac{1}{8}'' = 1'$, or as often expressed "one inch equals eight feet." For small buildings, perhaps up to sixty feet long $\frac{1}{4}'' = 1'$ is used. In order to keep the drawings to convenient working size, only one view, usually, is drawn on a sheet. The draftsman must be familiar with local and state building codes, and legal requirements as to approval, permits, and restrictions.

Plans.—A floor plan is a horizontal section at a distance above the floor varying so as to cut the walls at a height which will best show the construction. The cut would thus evidently cross all openings no matter at what height they were from the floor. The joist system or construction of the floor, and also any information regarding the ceiling above, as beams, gas and electric outlets, etc., may be shown on the same drawing.

The different details of the plan, such as windows, and doors, must be indicated by conventional representation, using symbols, which are readily understood by the contractors who have to

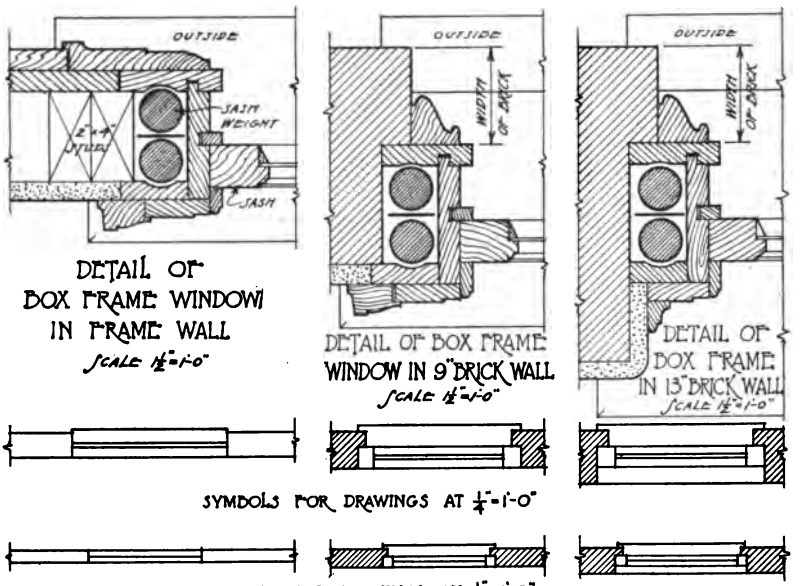

FIG. 479.—Window sections and symbols.

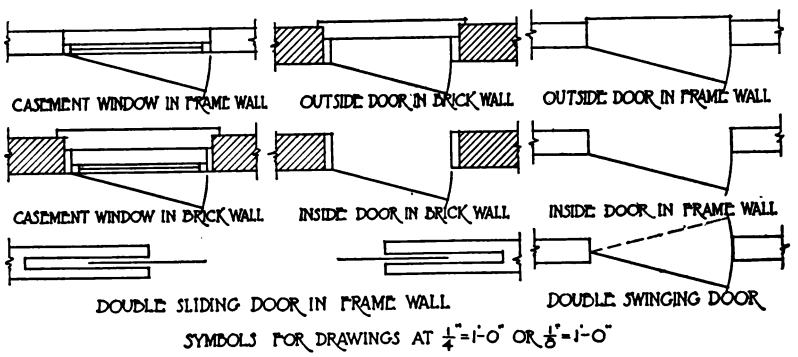

FIG. 480.—Symbols for doors.

read the drawings. Walls are shown by double lines, giving their thickness, the space between generally section-lined (or tinted) to indicate the material. Symbols for different materials are shown in Fig. 478. As there is no universally accepted

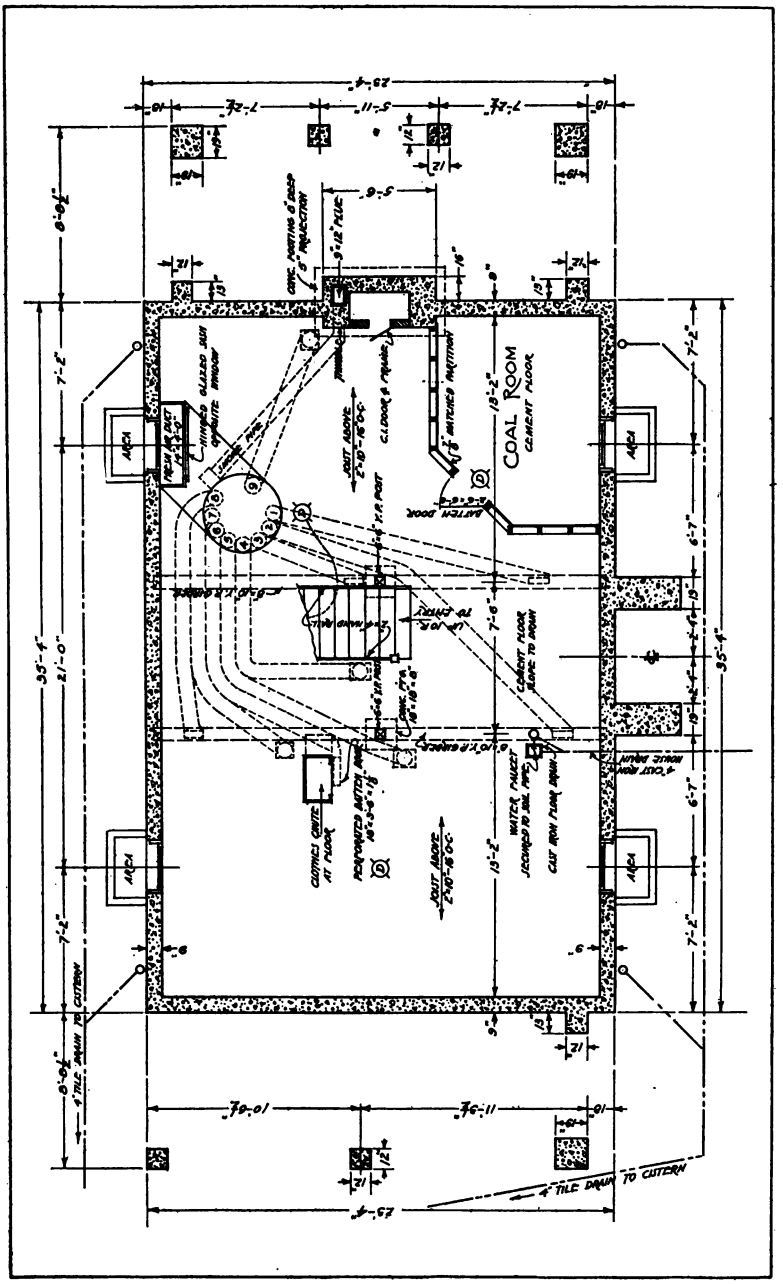

FIG. 481.—Basement plan.

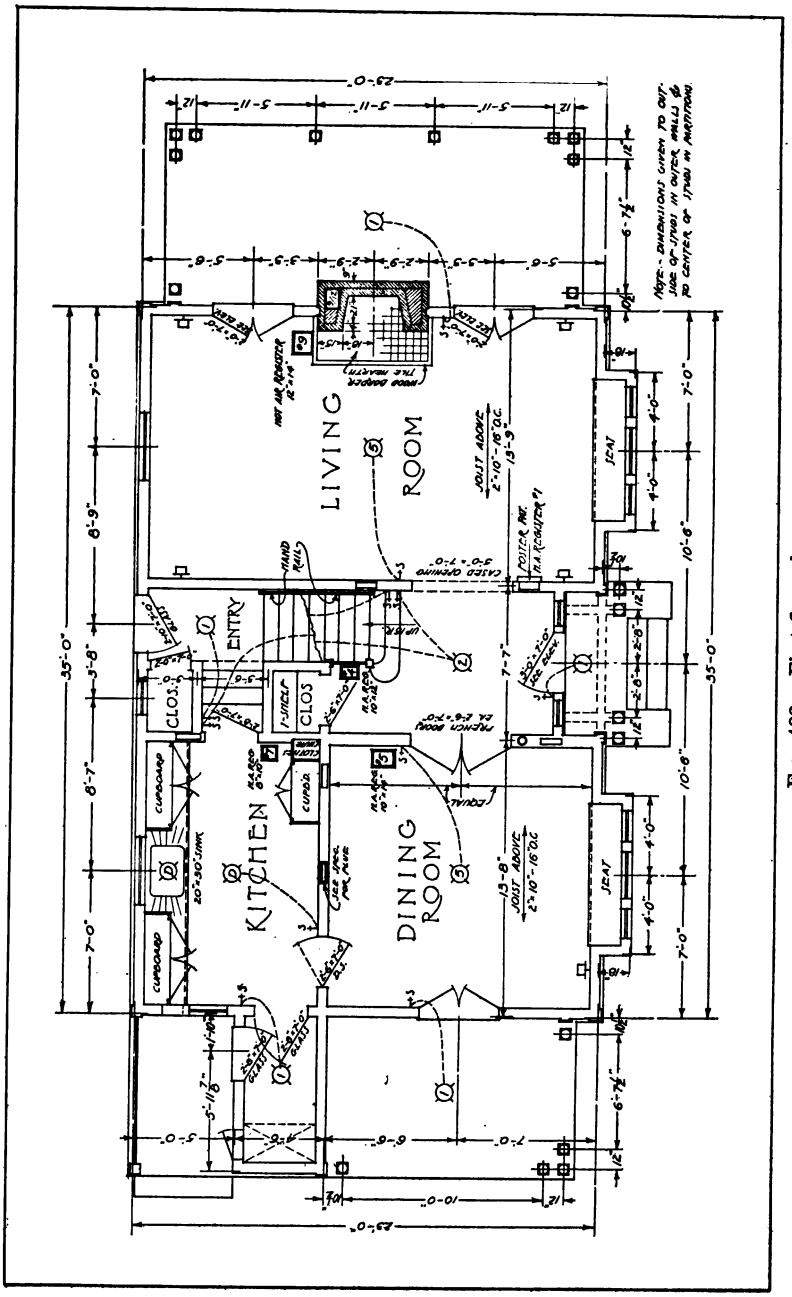

Fig. 482.—First floor plan.

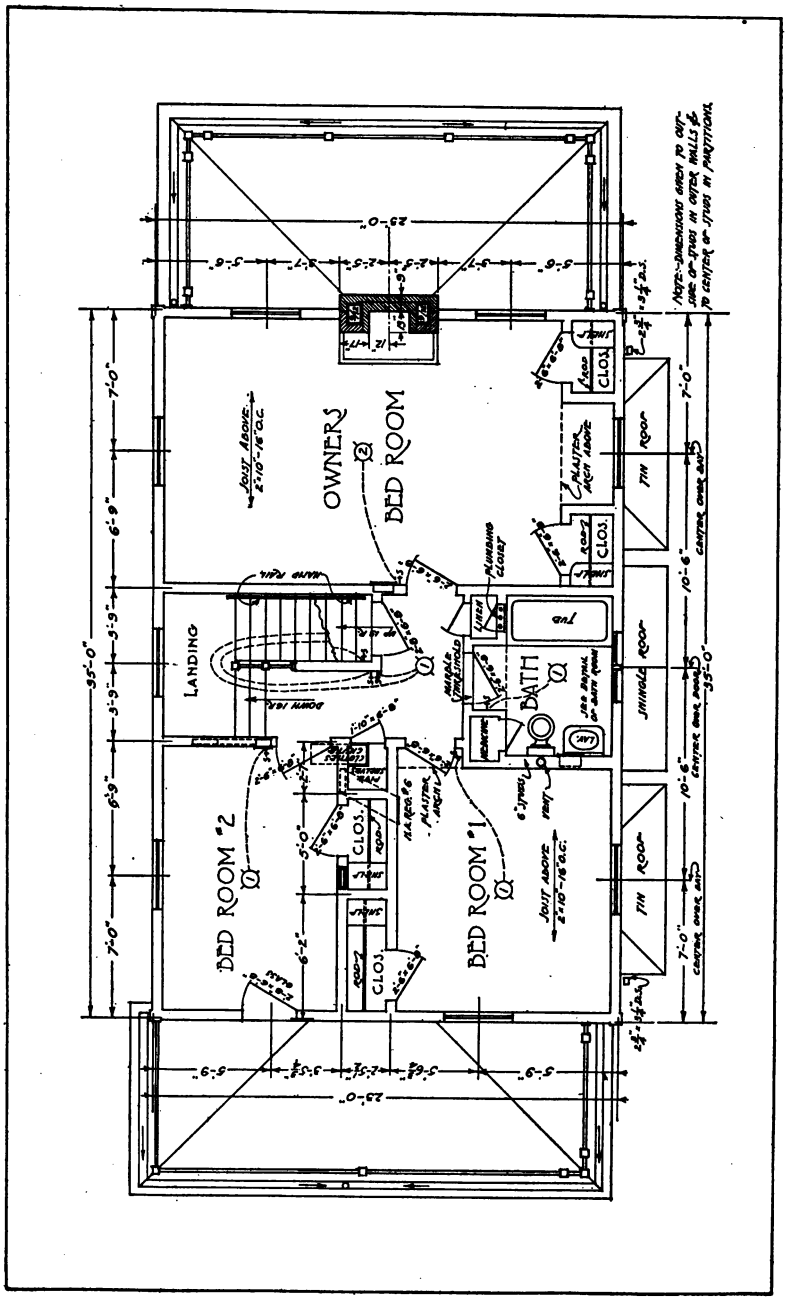

Fig. 483.—Second floor plan.

standard of symbols, a key to materials represented in section should always be given on the drawing. The conventional methods of representing windows, and their derivation from the actual sections are shown in Fig. 479. Doors and casement windows are given in Fig. 480. The standard symbols for wiring plans will be found on page 316.

Figs. 481, 482, and 483 are representative floor plans of a frame residence designed and drawn by Mr. W. B. Field. Careful study of these will be of value.

Elevations.—An elevation is a vertical projection showing the front, side or rear view of a structure, giving the heights and exterior treatment. The visualizing power must be exercised to imagine the actual appearance or perspective of a building from its elevations. Roofs in elevation are thus often misleading to persons unfamiliar with drawing, as their appearance in projection is so different from the real appearance of the building when finished. Figs. 484 and 485 illustrate what features are shown and what dimensions are given on elevations. The pump house, Fig. 486, shows the typical treatment of plan and elevation of this class of buildings.

Sections.—A section is an interior view on a vertical cutting plane, and is used primarily to indicate the heights of the floors and different parts, and to show the construction and architectural treatment of the interior. In a simple structure a part section or wall section shown with the elevation either to the same scale or larger, as in Figs. 485 and 486, is often sufficient. This cutting plane, as with the horizontal, need not be continuous, but may be broken so as to include as much information as possible.

Details.—A set of drawings will contain in addition to the plans, elevations and sections, larger scale drawings of such parts as are not shown with sufficient detail on the small scale drawings. Stair details and the like may be shown clearly to the scales of $\frac{3}{4}''$ or $1''$. As the building progresses the drawings are supplemented by full size drawings usually made in soft pencil only, of mouldings and other mill work details.

Dimensioning.—The correct dimensioning of an architectural drawing requires a knowledge of the methods of building construction. The dimensions should be placed so as to be the most convenient for the workman, should be given from and to accessible points, and chosen so that commercial variation in the

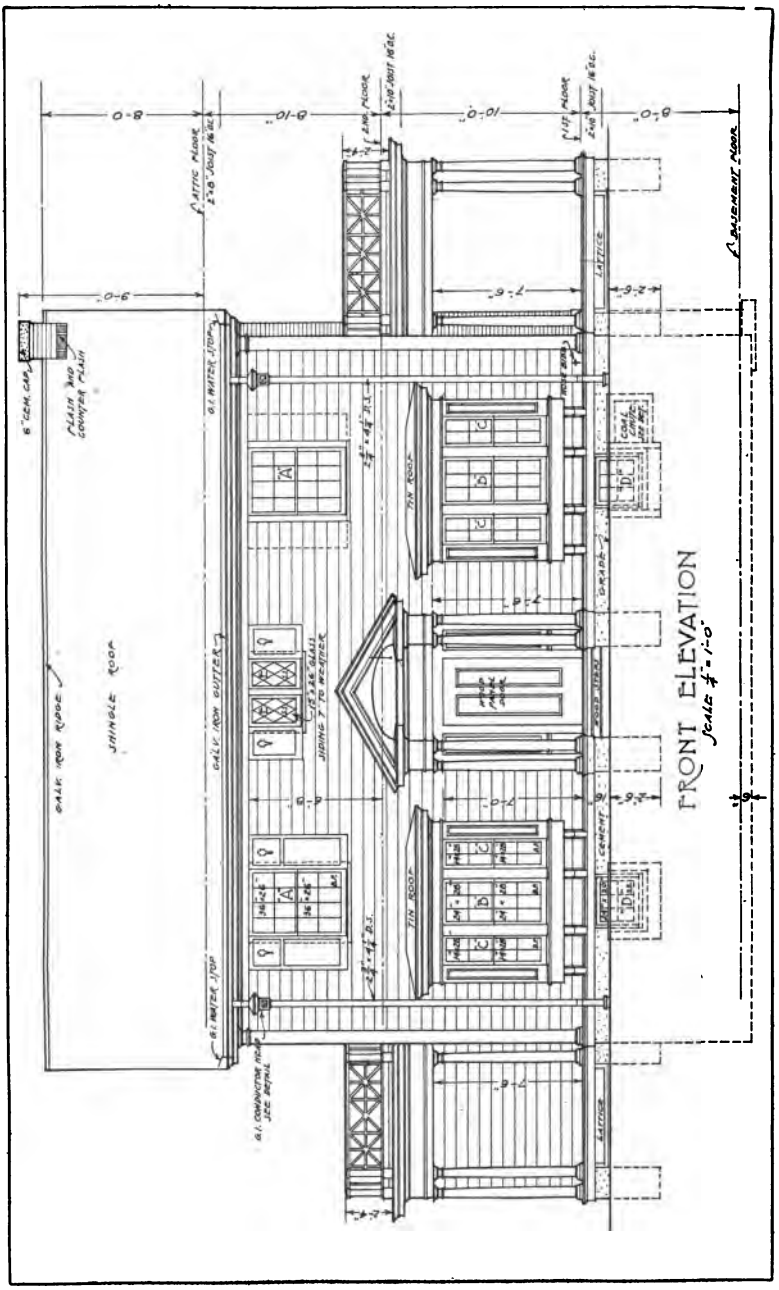

FIG. 484.—Front elevation.

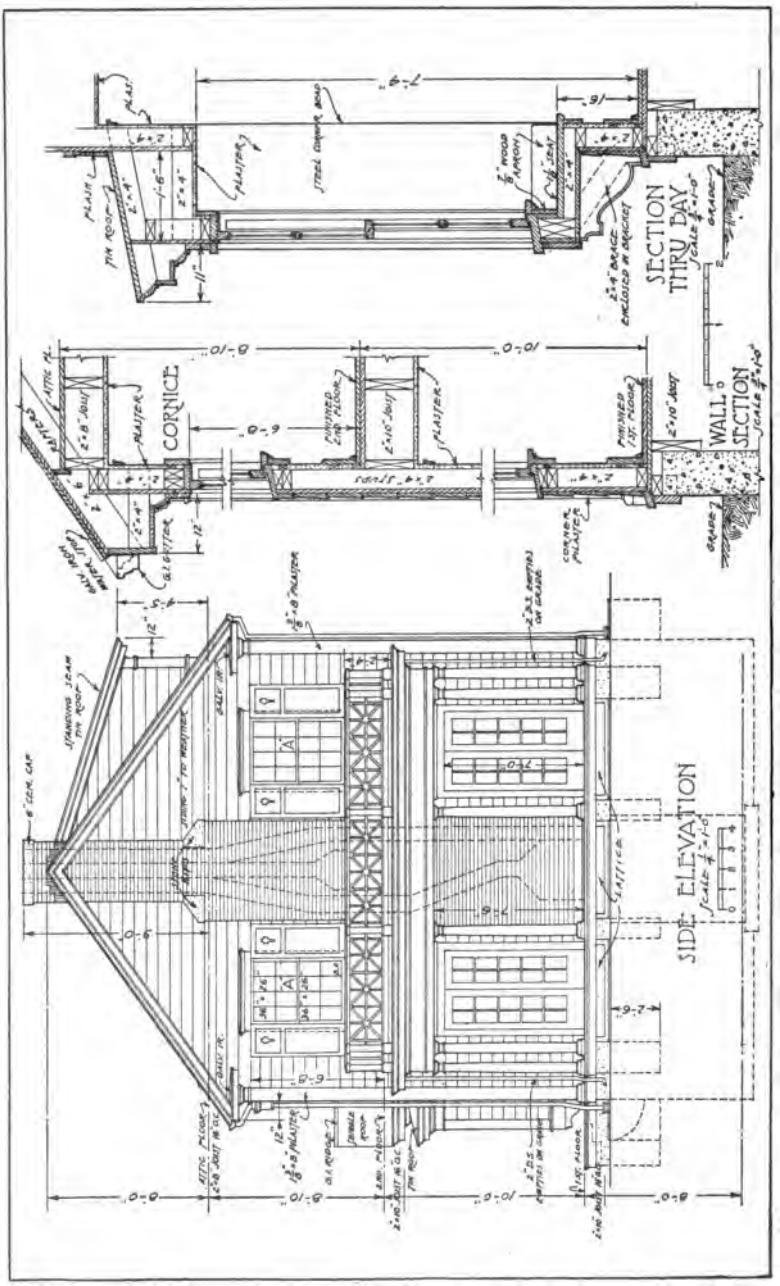

FIG. 485.—Side elevation and wall sections.

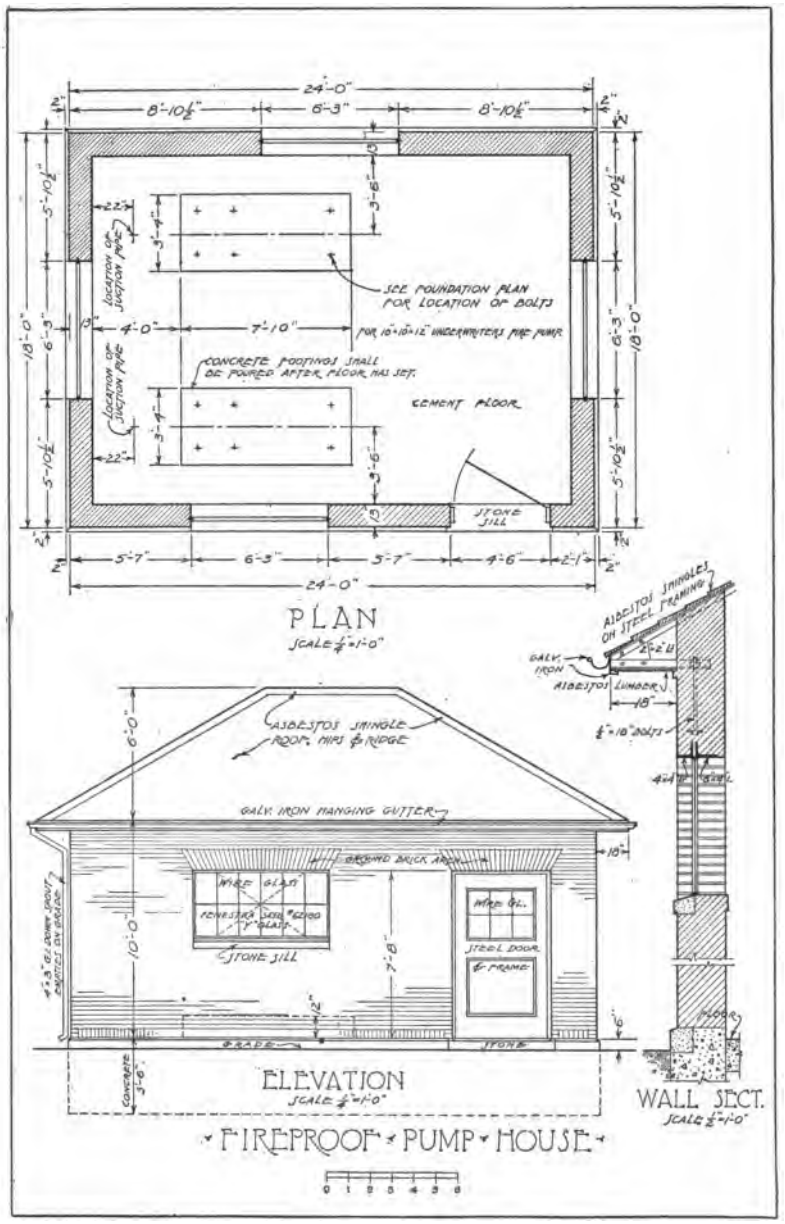

Fig. 486.—Drawing for a pump house.

sizes of materials will not affect the general dimensions. A study of the dimensioning on the figures of this chapter will be of value.

The statement that the notes were put in the specifications does not at all imply that no notes are to be placed on the drawings. On the other hand, there should be on architectural working drawings clear, explicit notes in regard to material, construction

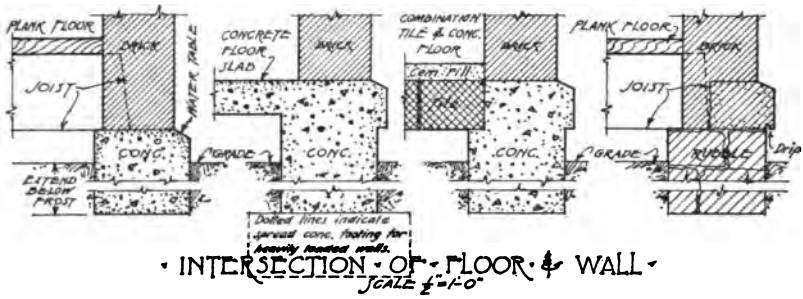

FIG. 487.—Foundation details.

and finish. The builders are apt to overlook a point mentioned only in the specifications, but as they are using the drawings constantly, will be sure to see a reference or note on the drawing of the part in question.

Details of Building Construction.—The engineer and architect are mutually dependent. In building, such questions as strength,

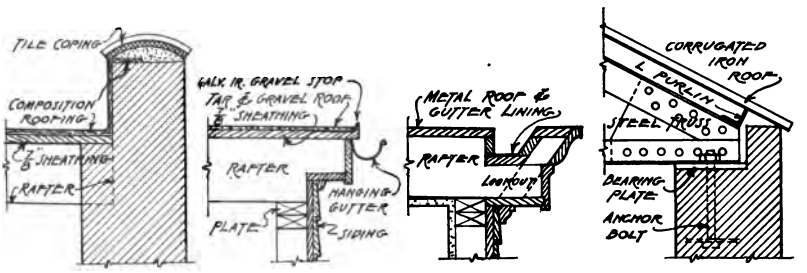

FIG. 488.—Cornice details.

mechanical apparatus and construction, are engineering problems while plan and exterior design are architectural problems.

In the design of a building for engineering or manufacturing purposes there are many considerations involved which the architect cannot be expected to know. The young engineer should be able to prepare preliminary layouts or to make drawings for

simple plant buildings. A few parts of such drawings are included here to suggest the method of representation, and the names of the different pieces are given.

Different forms of foundation, floor and wall construction for buildings without basement are shown in Fig. 487. Details of the methods of making connection between walls and different kinds of roofs are shown in Fig. 488. Column details may be represented as in Fig. 489 where the lower end, floor connections

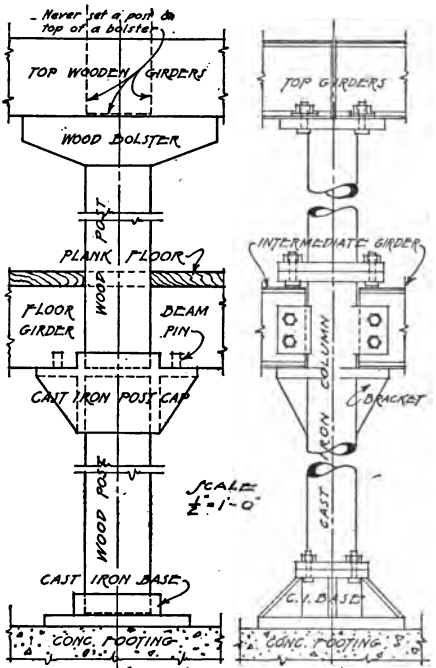

Fig. 489.

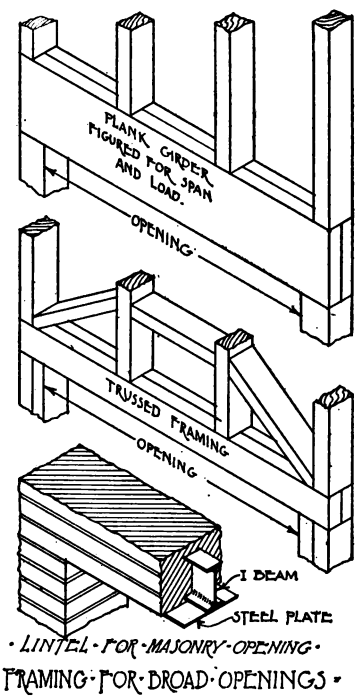

Fig. 490.

and upper end are illustrated. Part of the details for large openings in both brick and frame walls are given in Fig. 490.

A part of an elevation of one "bent" of a wooden factory building, showing the sizes and locations of the different timbers is shown in Fig. 491. Similar drawings may be required for floor and roof framing. The extent of detail on such drawings varies but in all cases it is necessary to have all the information either on the drawings or in the specifications so that there will be no

possibility of misunderstanding after the construction work is started.

Drawing a Plan.—A plan is always laid out with the front of the building at the bottom of the sheet. After selecting the scale ($\frac{1}{4}'' = 1'$ for ordinary house plans) draw and measure a line representing the outside face of the front wall. If the plan is symmetrical draw the main axis. The axes of a plan correspond to the center lines of a machine drawing and have a very important place in design. Complete the exterior walls and interior partitions (frame walls are drawn 6″ thick, brick walls 9″, 13″, 17″, etc.), then locate stairways, doors, and other interior

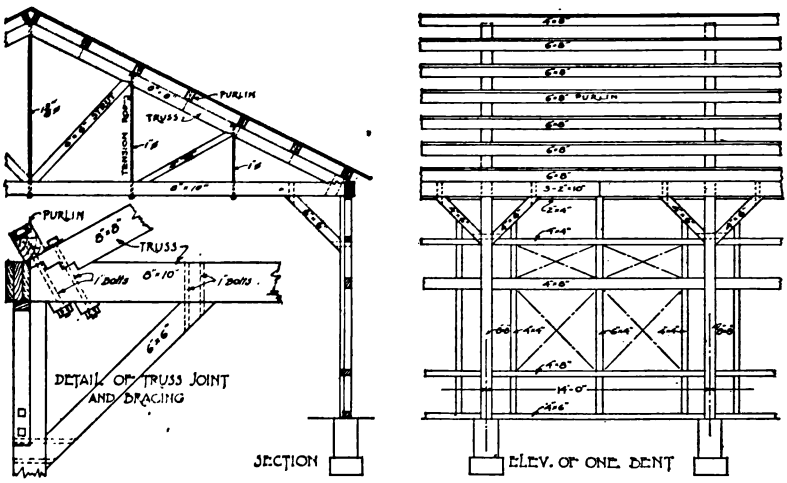

FIG. 491.—One bent, single story shop building.

construction. The windows are not drawn until the elevations have been designed, but center lines for their symmetrical position in the wall space are indicated. The first floor plan is made first and the outlines for the others traced or drawn from it.

Drawing an Elevation.—First draw a wall section at the side of the sheet, starting with the foundation, and showing grade line, floor heights, sill and head of windows, cornice, and pitch of roof, and thickness of walls. Carry the grade line across the sheet as the working base line. Project the floor and ceiling lines across lightly. With the plan sheet placed above the elevation project down for widths. Locate the windows, and complete the elevation as shown in the figures.

Lettering.—There are two distinct divisions in the use of lettering by the architect, the first *Office Lettering*, including all

the titles and notes put on drawings for information, the second, *Design Lettering*, covering drawings of letters to be executed in stone or bronze or other material in connection with design.

The Old Roman is the architect's one general purpose letter, which serves him, with few exceptions, for all his work in both divisions. It is a difficult letter to execute properly, and the draftsman should make himself thoroughly familiar with its construction, character and beauty before attempting to design inscriptions for permanent structures, or even titles.

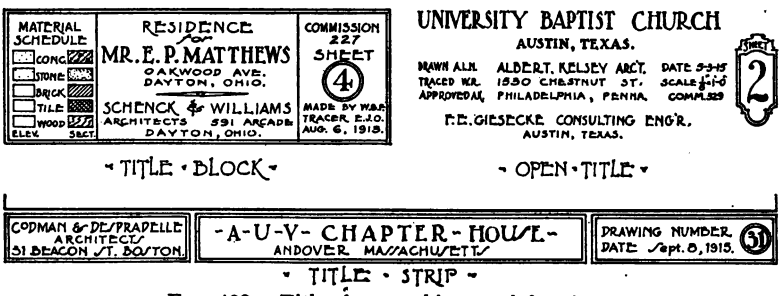

FIG. 492.—Titles from architectural drawings.

Titles on display drawings are usually made in careful Old Roman, either in outline or solid. One alphabet is given in Fig. 131. On working drawings a rapid, single stroke based on Old Roman, such as Fig. 132 is used.

An architectural title should contain part or all of the following items:

1. Name and location of structure.
2. Kind of view, as roof plan, elevation (sometimes put on different part of sheet).
3. Name and address of owner or client.
4. Date.
5. Scale.
6. Name and address of architect.
7. Number (in the set).
8. Key to materials.
9. Office record.

Three examples of working drawing titles are shown in Fig. 492.

PROBLEMS

The sketch plans given in Fig. 493 are suggested as a basis from which complete working plans may be drawn.

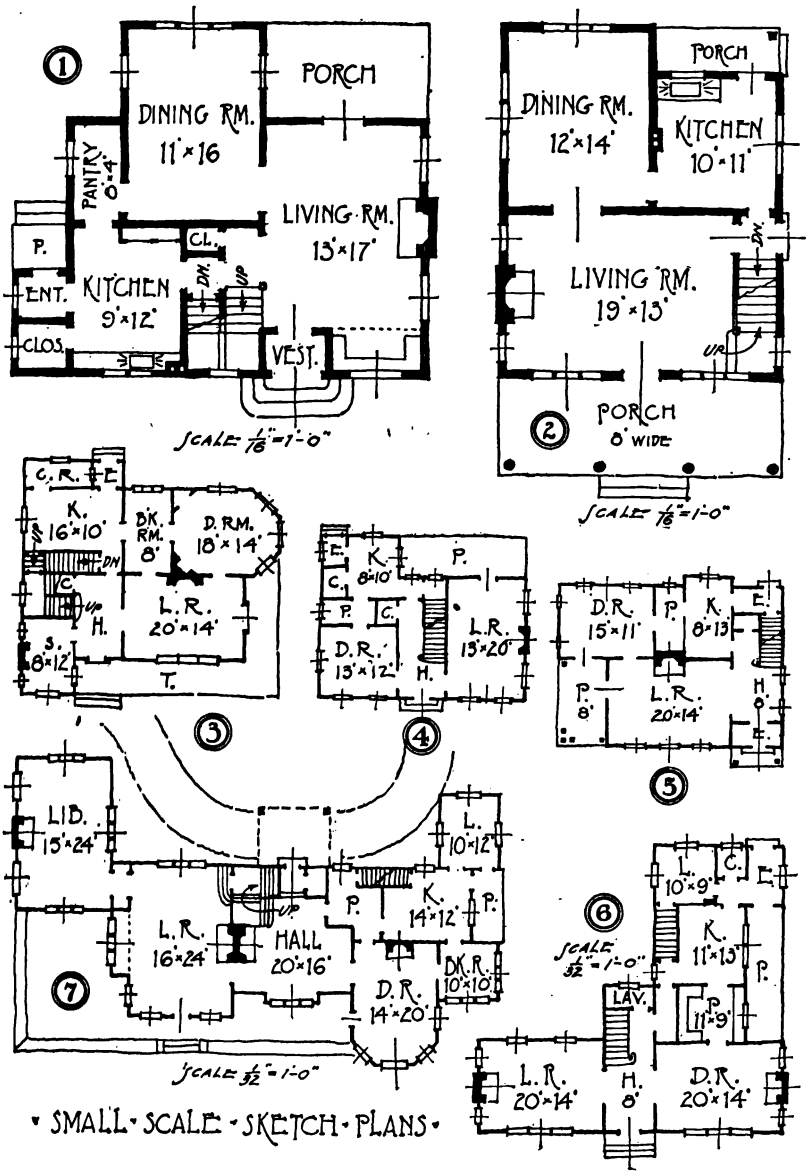

FIG. 493.—Problem studies.

CHAPTER XIV

Map and Topographical Drawing

Thus far in our consideration of drawing as a graphic language we have had to represent the three dimensions of an object, either pictorially or, in the usual case, by drawing two or more views of it. In map drawing, the representation of features on parts of the earth's surface, there is the distinct difference that the drawing is complete in one view, the third dimension (the height) either being represented on this view, or in some cases omitted as not required for the particular purpose for which the map was made.

The surveying and mapping of the site is the first preliminary work in improvements and engineering projects, and it is desirable that all engineers should be familiar with the methods and symbols used in this branch of drawing. Here again, as in our discussion of architectural drawing, we cannot consider the practice of surveying and plotting, or go into detail as to the work of the civil engineer, but we are interested in his use of drawing as a language, and in the method of commercial execution of plats and topographical maps.

Classification.—Maps in general may be classified as follows:

1. Those on which the lines drawn represent imaginary or unreal lines, such as divisions between areas subject to different authority or ownership, either public or private; or lines indicating geometrical measurements on the ground. In this division may be included plats or land maps, farm surveys, city subdivisions, plats of mineral claims.

2. Those on which lines are drawn to represent real or material objects within the limits of the tract, showing their relative location, or size and location, depending upon the purpose of the map. When relative location only is required the scale may be small, and symbols employed to represent objects, as houses, bridges or even towns. When the size of the object is an important consideration the scale must be large and the map becomes a real orthographic top view.

3. Those on which lines or symbols are drawn to tell the relative elevation of the surface of the ground. These would be called relief maps, or if contours are used with elevations marked on them, contour maps.

Various combinations of these divisions may be required for different purposes. A topographic map, being a complete description of an area, would include 1, 2 and 3, although the term may be used for a combination of any two.

Plats.—A map plotted from a plane survey, and having the third dimension omitted, is called a "plat" or "land map." It is used in the description of any tract of land when it is not necessary to show relief, as in such typical examples as a farm survey or a city plat.

The first principle to be observed in the execution of this kind of drawings is *simplicity*. Its information should be clear, concise and direct. The lettering should be done in single stroke, and the north point and border of the simplest character. The day of the intricate border corner, elaborate north point, and ornamental title is, happily, past, and all such embellishments are rightly considered not only as a waste of time, but as being in extremely bad taste.

Plat of a Survey.—The plat of a survey should give clearly all the information necessary for the legal description of the parcel of land. It should contain:

1. Lengths and bearings of the several sides.
2. Acreage.
3. Location and description of monuments found and set.
4. Location of highways, streams, etc.
5. Official division lines within the tract.
6. Names of owners of abutting property.
7. Title and north point.
8. Certification.

Fig. 494 illustrates the general treatment of this kind of drawing. It is almost always traced and blue printed, and no water-lining of streams or other elaboration should be attempted. It is important to observe that the size of the lettering used for the several features must be in proportion to their importance.

A Railroad Property Map.—Of the many kinds of plats used in industrial work one only is illustrated here, the portion of a railway situation or station map, Fig. 495. This might represent also a plant valuation map, a type of plat often required. The

information on such maps varies to meet the requirements of particular cases. In addition to the preceding list, it might include such items as pipe lines, fire hydrants, location and description of buildings, railroads and switch points, outdoor crane runways, etc.

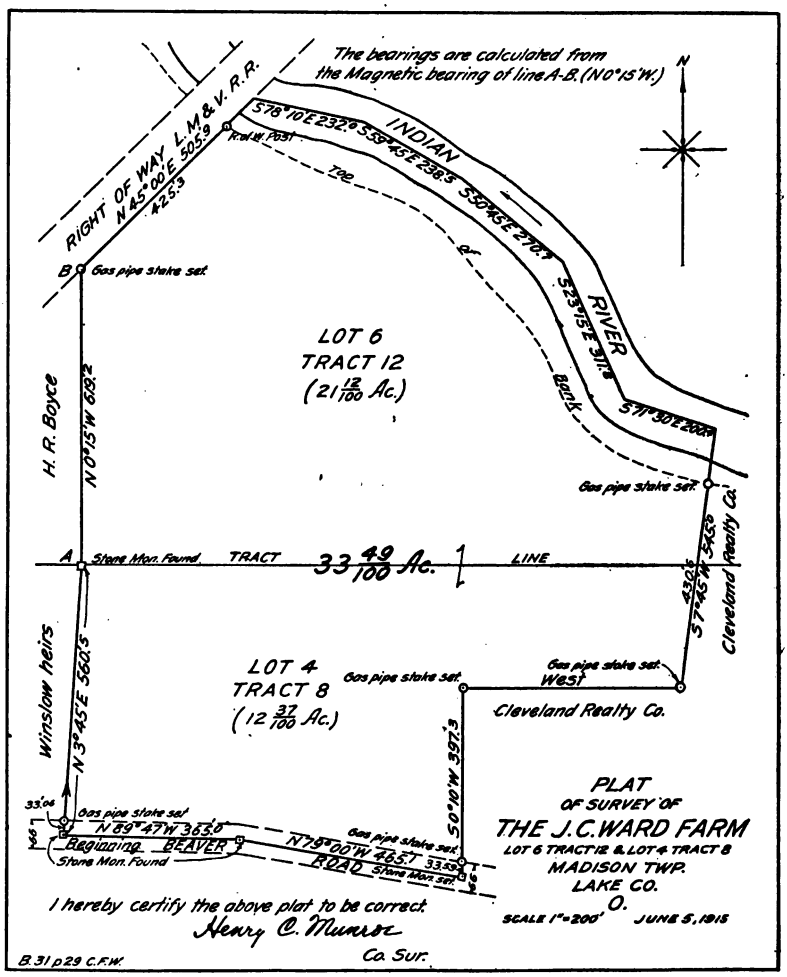

FIG. 494.—Plat of a survey.

Plats of Subdivisions.—The plats of subdivisions and allotments in cities are filed with the county recorder for record, and must be very complete in their information concerning the

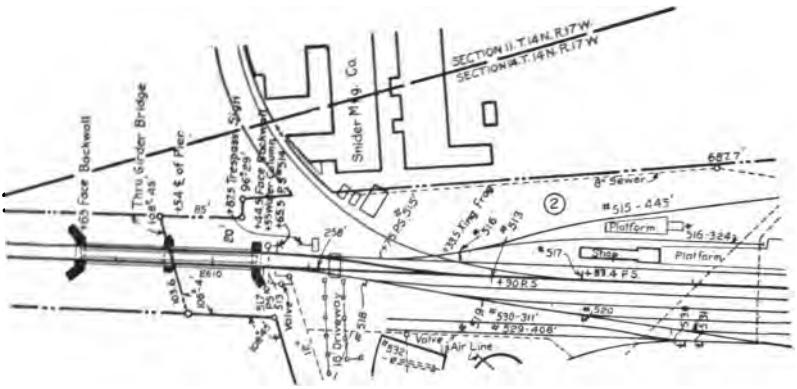

Fig. 495.—Part of a railroad property map.

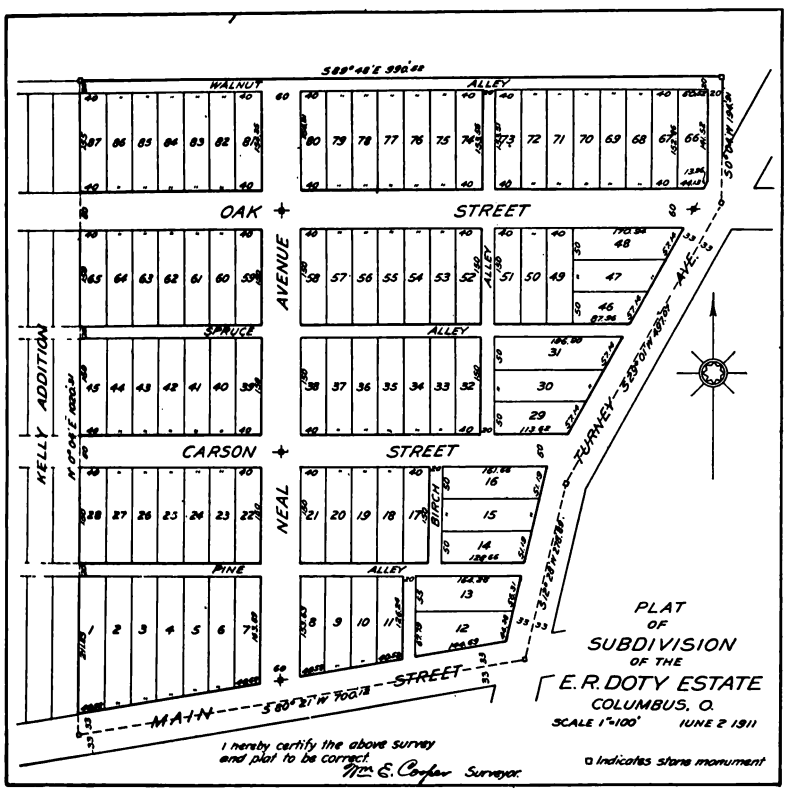

Fig. 496.—A city subdivision.

location and size of the various lots and parcels composing the subdivisions, Fig. 496. All monuments set should be shown and all measurements of lines and angles given, so that it will be possible to locate any lot with precision.

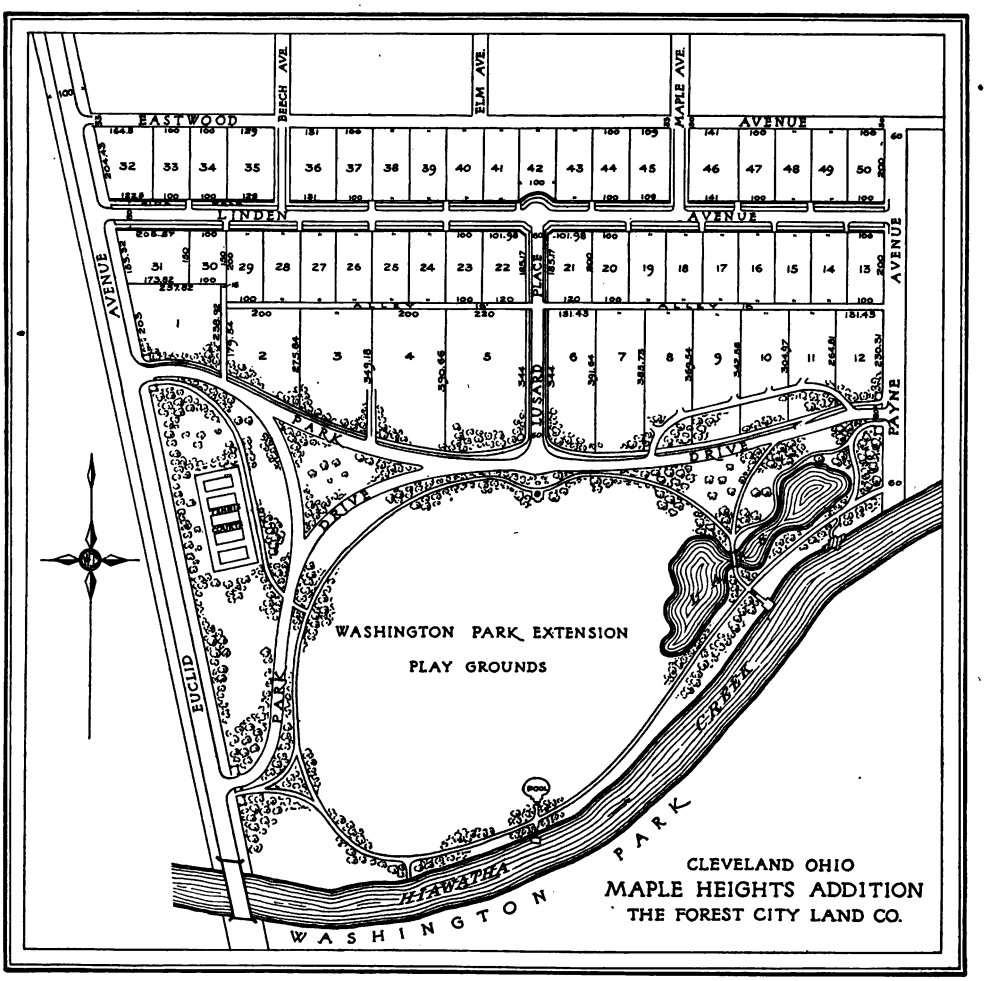

FIG. 497.—A real estate display map.

Sometimes landowners desire to use these maps in display to prospective buyers, and some degree of embellishment is allowable, but care must be taken not to overdo the ornamentation. These drawings are usually finished as blue prints. Fig. 497 is

an example showing an acceptable style of execution and finish.

When required for reproduction to small size for illustrative purposes a rendering such as shown in Fig. 498 is sometimes effective.

City Plats.—Under this head is included chiefly maps or plats drawn from subdivision plats or other sources for the record of city improvements. These plats are used for the record of a variety of information, such as, for example, the location of sewers, water mains, street railways, and street improvements.

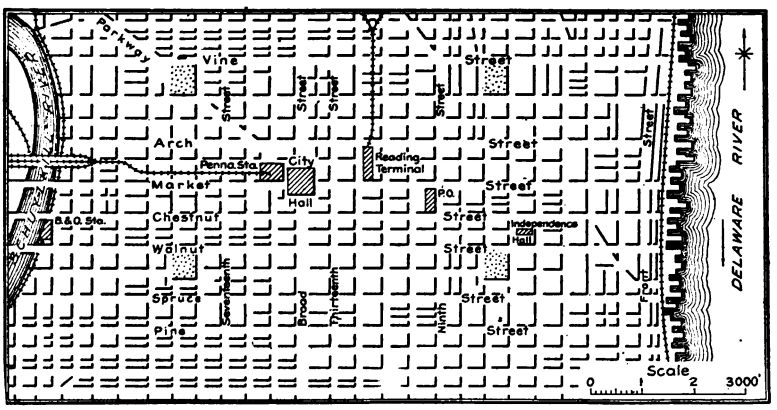

FIG. 498.—A shade line map.

One valuable use is in the levying of assessments for street paving, sewers, etc. As they are made for a definite purpose they should not contain unnecessary information, and hence will not include all the details as to sizes of lots, location of monuments, etc., which are given on subdivision plats. They are usually made on mounted paper and should be to a scale large enough to show clearly the features required, 100′ and 200′ to the inch are frequent scales, and as large as 50′ is sometimes used. For smaller cities the entire area may be covered by one map; in larger cities the maps are made in convenient sections so as to be filed readily.

A study of Fig. 499, a sewer map, will show the general treatment of such plats. The appearance of the drawing is improved by adding shade lines on the lower and right hand side of the blocks, *i.e.*, treating the streets and water features as depressions.

A few of the more important public buildings are shown, to facilitate reading. The various wards, subdivisions or districts may be shown by large outline letters or numerals as illustrated in the figure.

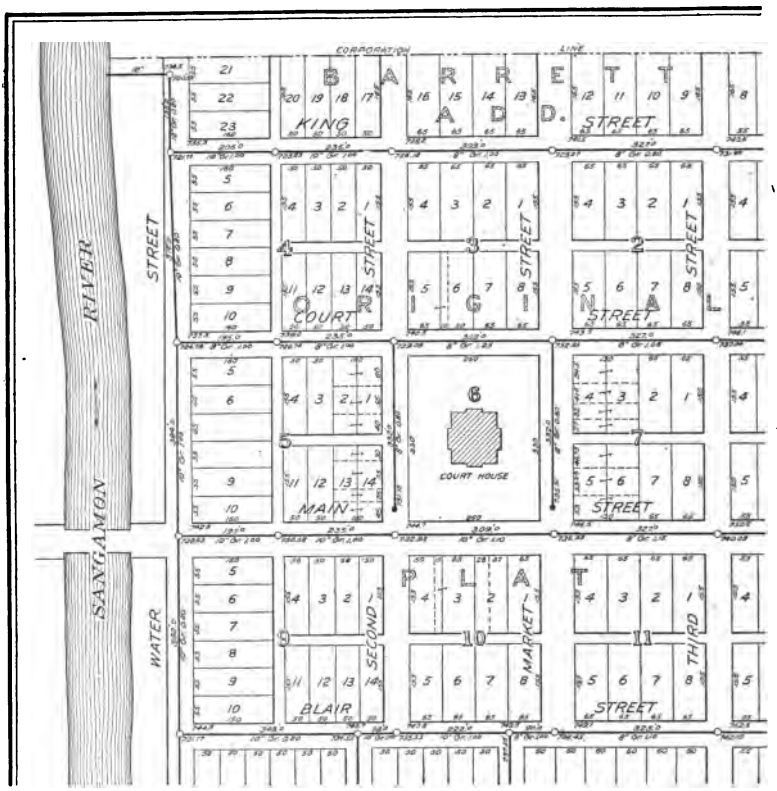

FIG. 499.—A sewer map.

Topographical Drawing.—As before defined, a complete topographical map would contain:

1. The imaginary lines indicating the divisions of authority or ownership.

2. The geographical position of both the natural features and the works of man. They may also include information in regard to the vegetation.

3. The relief, or indication of the relative elevations and depressions. The relief, which is the third dimension, is represented in general either by contours or by hill shading.

A contour is a line on the surface of the ground which at every point passes through the same elevation, thus the shore line of a body of water represents a contour. If the water should rise one foot the new shore line would be another contour, with one foot "contour interval." A series of contours may thus be illustrated approximately by Fig. 500.

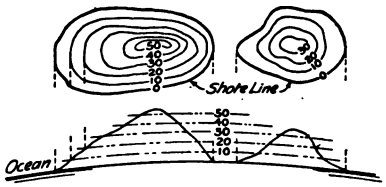

FIG. 500.—Contours.

Fig. 501 is a perspective view of a tract of land. Fig. 502 is a

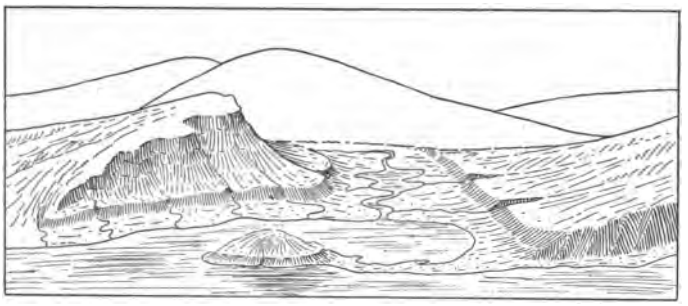

FIG. 501.—Perspective view.

contour map of this area, and Fig. 503 is the same surface shown with hill shading by hachures. Contours are drawn as fine, full

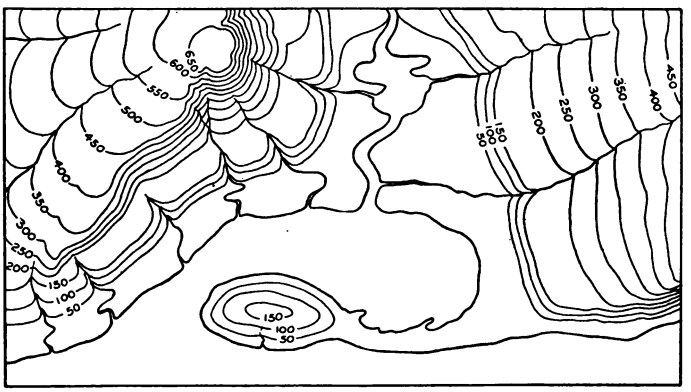

FIG. 502.—Application of contour lines.

lines, with every fifth one of heavier weight, and the elevations in feet marked on them at intervals, usually with the sea level

as datum. They may be drawn with a swivel pen, Fig. 18, or with a fine pen such as Gillott's 303. On paper drawings they are usually made in brown.

FIG. 503.—Application of hachures for hill shading.

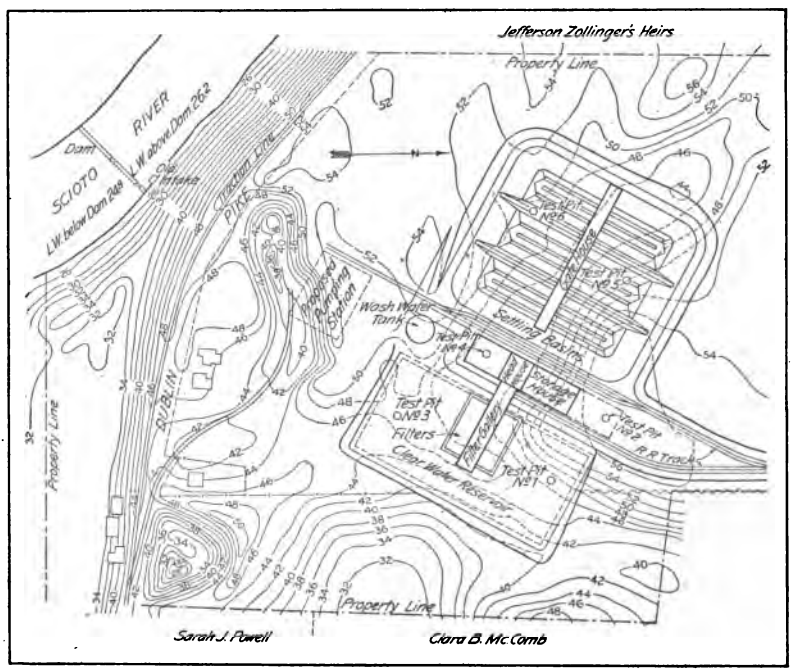

FIG. 504.—Contour map for engineering project.

The showing of relief by means of hill shading gives a pleasing effect but is very difficult of execution, does not give exact elevations and would not be applied on maps to be used for engineering purposes. It may sometimes be used to advantage in reconnaissance maps, or in small scale maps for illustration. There are several systems, of which hachuring is the commonest. The contours are sketched lightly in pencil and the hachures drawn perpendicular to them, starting at the summit and making heavier strokes for steeper slopes. The rows of strokes should touch the pencil line, to avoid white streaks along the contours.

Fig. 504 is a topographic map of the site of a proposed filtration plant, and illustrates the use of the contour map as the necessary preliminary drawing in engineering projects. Often on the same drawing there is shown, by lines of different character, both the existing contours and the required finished grades.

Water-lining.—On topographic maps made for display or reproduction the water features are usually finished by "water-lining," running a system of fine lines parallel to the shore lines, either in black or in blue (it must be remembered that blue will

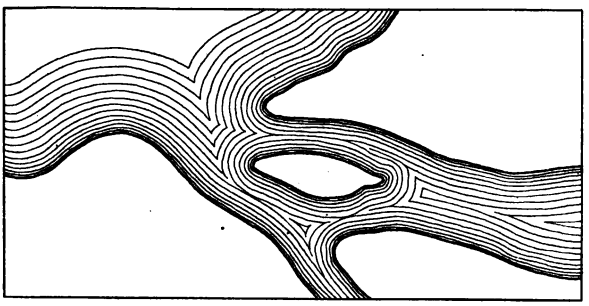

FIG. 505.—Water lining.

not photograph for reproduction nor print from a tracing). Poor water-lining will ruin the appearance of an otherwise well-executed map, and it is better to omit it rather than do it hastily or carelessly. The shore line is drawn first, and the water-lining done with a fine mapping pen, as Gillott's 170 or 290, always drawing toward the body and having the preceding line to the left. The first line should follow the shore line very closely, and the distances between the succeeding lines gradually increased and the irregularities lessened. Sometimes the weight of lines is graded as well as the intervals but this is a very difficult opera-

tion and is not necessary for the effect. A common mistake is to make the lines excessively wavy or rippled.

In water-lining a stream of varying width, the lines are not to be crowded so as to be carried through the narrower portions, but corresponding lines should be brought together in the middle of the stream as illustrated in Fig. 505. Care should be taken to avoid any spots of sudden increase or decrease in spacing.

Topographic Symbols.—The various symbols used in topographic drawing may be grouped under four heads:

1. Culture, or the works of man.
2. Relief—relative elevations and depressions.
3. Water features.
4. Vegetation.

When color is used the culture is done in black, the relief in brown, the water features in blue, and the vegetation in black or green.

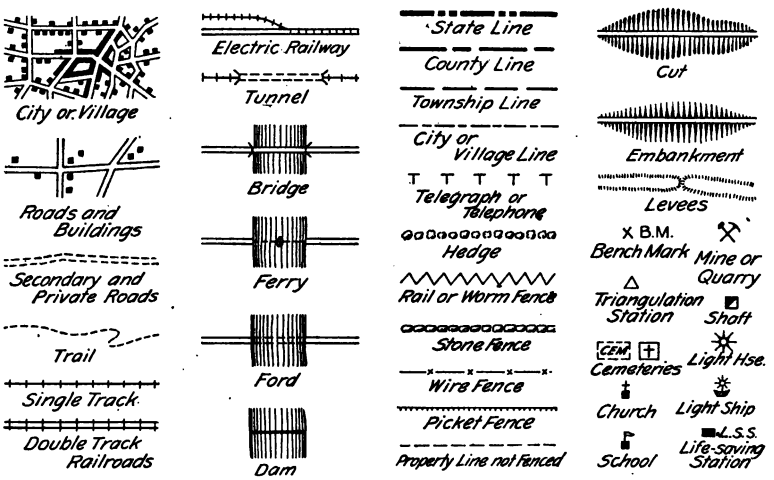

FIG. 506.—Culture.

These symbols, used to represent characteristics on the earth's surface, are made, when possible, to resemble somewhat the features or object represented as it would appear either in plan or elevation. No attempt is here made to give symbols for all the features that might occur in a map, indeed one may have to invent symbols for some particular locality.

Fig. 506 illustrates a few of the conventional symbols used for culture or the works of man, and no suggestion is needed as to

the method of their execution. When the scale used is large, houses, bridges, roads, and even tree trunks can be plotted so that their principal dimensions can be scaled. A small scale map can give by its symbols only the relative locations.

In Fig. 507 is given the standard symbols used in the development of oil and gas fields; in Fig. 508 symbols used to show relief;

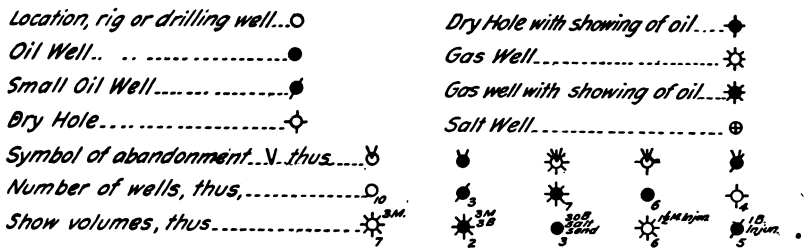

FIG. 507.—Oil and gas symbols.

in Fig. 509 water features and in Fig. 510 some of the commoner symbols for vegetation and cultivation.

Draftsmen should keep in mind the purpose of the map, and the relative importance of features should be in some measure indicated by their prominence or strength, gained principally by the amount of ink used. For instance, in a map made for

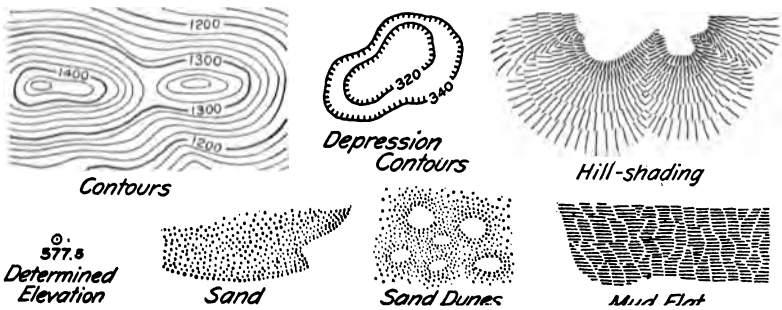

FIG. 508.—Relief.

military maneuvering a cornfield might be an important feature; or in maps made to show the location of special features, such as fire hydrants, these objects would be indicated very plainly. This principle calls for some originality to meet varying cases.

A common fault of the beginner is to make symbols too large. The symbols for grass, shown under "meadow," Fig. 510, if not made and spaced correctly will spoil the entire map. This

symbol is composed of from five to seven short strokes radiating from a common center and starting along a horizontal line, as

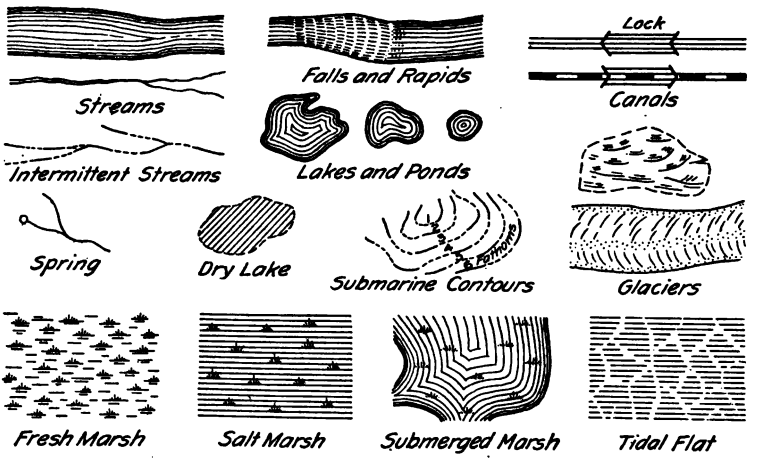

FIG. 509.—Water features.

shown in the enlarged form, each tuft beginning and ending with a mere dot. Always place the tufts with the bottom parallel to the border and distribute them uniformly over the space, but

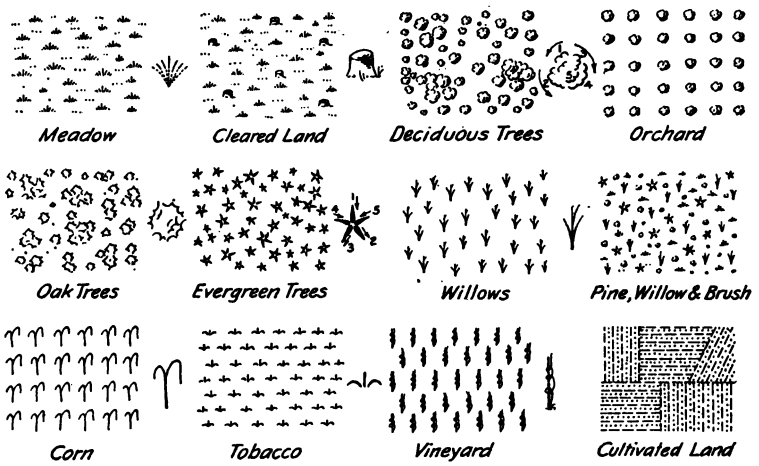

FIG. 510.—Vegetation.

not in rows. A few incomplete tufts, or rows of dots improve the appearance. Grass tufts should never be as heavy as tree

symbols. In drawing the symbol for deciduous trees the sequence of strokes shown should be followed.

The topographic map, Fig. 511, is given to illustrate the general execution and placing of symbols.

The well-known maps of the Coast Survey and Geological Survey illustrate the application of topographical drawing. The quadrangle sheets issued by the topographical branch of the U. S. Geological Survey are excellent examples and so easily

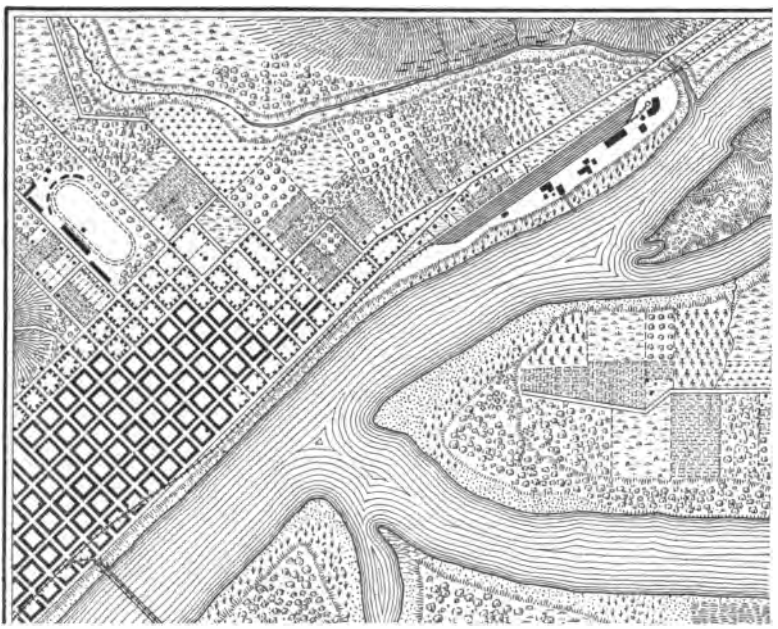

FIG. 511.—Part of a topographic map.

available that every draftsman should be familiar with them. These sheets represent 15 minutes of latitude and 15 minutes of longitude to the scale of 1 : 62500 or approximately 1 inch to the mile. The entire United States is being mapped by the Department in coöperation with the different states, and in 1918 over 41% had been completed, the amounts varying widely in different states, as 91% of New York, 56% of Pennsylvania, 10% of Indiana, all of Ohio and five other states. Much territory in the West and South has been mapped ½ inch to

the mile, and earlier some in the West was mapped ¼ inch to the mile. These maps may be secured for ten cents each (not stamps) by addressing *The Director, U. S. Geological Survey, Washington, D. C.* from whom information as to the completion of any particular locality or the progress in any state may be had.

Lettering.—The style of lettering on a topographic map will of course depend upon the purpose for which the map is made. If for construction purposes, such as a contour map for the study of municipal problems, street grades, plants, or railroads, the single-stroke Gothic and Reinhardt is to be preferred. For a finished map vertical modern Roman letters for land features, and inclined Roman and stump letters for water features should be used. The scale should always be drawn as well as stated.

Profiles.—Perhaps no kind of drawing is used more by civil engineers than the ordinary profile, which is simply a vertical section taken along a given line either straight or curved. Such drawings are indispensable in problems of railroad construction, highway and street improvements, sewer construction, and many other problems where a study of the surface of the ground is required. Very frequently engineers other than civil engineers are called upon to make these drawings. Several different types of profile and cross-section paper are in use and may be found in the catalogues of the various firms dealing in drawing materials. One type of profile paper in common use is known as "Plate A" in which there are four divisions to the inch horizontally and twenty to the inch vertically. Other divisions which are used are 4×30 to the inch and 5×25 to the inch. At intervals both horizontally and vertically somewhat heavier lines are made in order to facilitate reading.

Horizontal distances are plotted as abscisses and elevations as ordinates. The vertical distances representing elevations, being plotted to larger scale, a vertical exaggeration is obtained which is very useful in studying the profile for the establishing of grades. The vertical exaggeration is sometimes confusing to the layman or inexperienced engineer, but ordinarily a profile will fail in the purpose for which it was intended if the horizontal and vertical scale are the same. Again the profile unless so distorted would be a very long and unwieldy affair, if not entirely impossible to make. The difference between profiles with and

without vertical exaggeration is shown in Figs. 512 and 513. Fig. 514 is a profile together with the alignment which is drawn just below the profile proper. This figure represents a

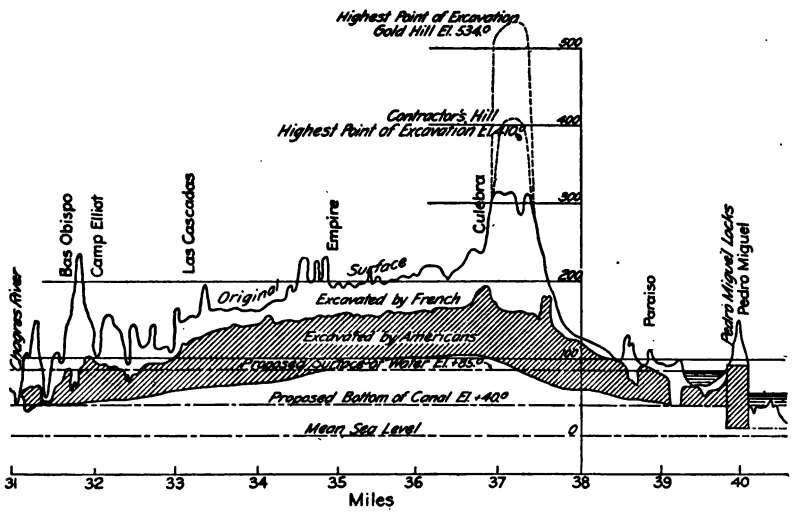

FIG. 512.—Profile. (Vert. scale 50 times hor.)

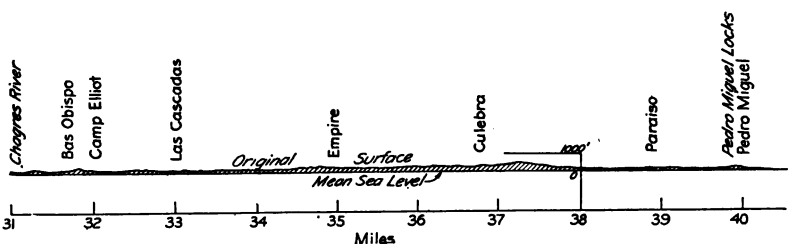

FIG. 513.—Profile. (Vert. and hor. scales equal.)

common method employed by draftsmen in railroad offices. Attention is called to the method of straightening out the alignment. Such a method is also used on surveys for improvement of highways and the like.

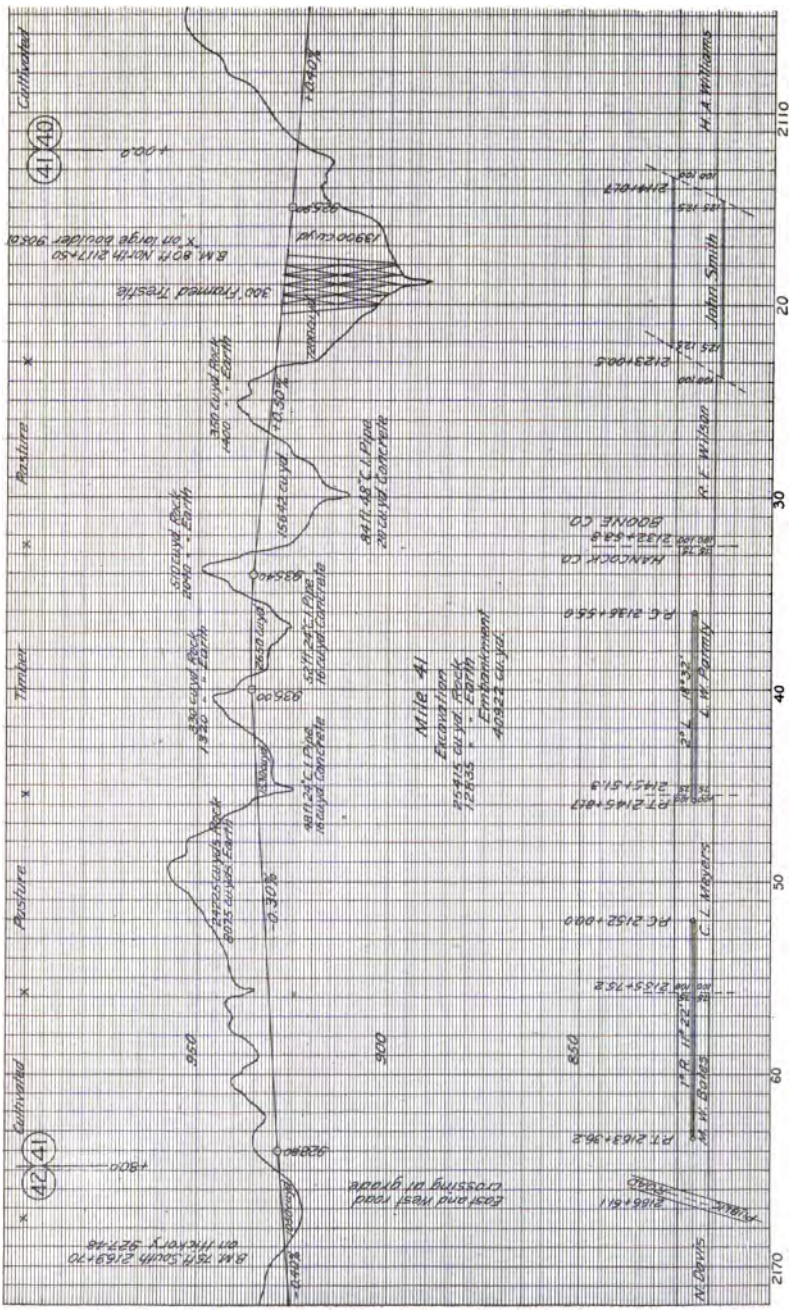

FIG. 514.—Standard profile for railroad construction.

CHAPTER XV

Duplication and Drawing for Reproduction

As has been stated, working drawings or any drawings which are to be duplicated are usually traced. Sometimes drawings of a temporary character are, for economy, traced on white tracing paper, but tracing cloth is more transparent, much more durable, prints better, and is easier to work on.

Drawings intended for blue printing are sometimes penciled only, or penciled and inked on bond or ledger paper. A print from these papers requires more exposure and has a mottled appearance, showing plainly the texture and watermarks.

Tracing cloth is a fine thread fabric, sized and transparentized with a starch preparation. The smooth side is considered by the makers as the right side, but most draftsmen prefer to work on the dull side, principally because it will take a pencil mark. The cloth should be tacked down smoothly over the pencil drawing and its selvage torn off. It should then be dusted with chalk or prepared pounce and rubbed off with a cloth, to remove the traces of grease which sometimes prevents the flow of ink (a blackboard eraser serves very well for this purpose).

To insure good printing the ink should be perfectly black, and the outline should be made with a bolder line than would be used on paper, as the contrast of a white line on the blue ground is not so strong as the black line on a white ground. Red ink should not be used unless it is desired to have some lines very inconspicuous. Blue ink will not print. Sometimes, in maps, diagrams, etc., to avoid confusion of lines, it is desired to use colored inks on the tracing; if so a little Chinese white added will render them opaque enough to print.

Sometimes, instead of section lining, sections are indicated by rubbing a pencil tint over the surface on the dull side, or by putting a wash of color on the tracing either on the smooth side or on the dull side. These tints will print in lighter blue than the background.

Ink lines may be removed from tracing cloth by rubbing with a pencil eraser. A triangle should be slipped under the tracing

to give a harder surface. The rubbed surface should afterward be burnished with an ivory or bone burnisher, or with a piece of talc (tailor's chalk) or, in the absence of other means, with the thumb nail. Do not take up a blot with a blotter but scoop it up with the finger leaving a smear. Erase the smear when dry, with a pencil eraser. In tracing a part that has been section lined, a piece of white paper should be slipped under the cloth and the section lining done without reference to the drawing underneath.

For an unimportant piece of work it is possible to make a freehand tracing from an accurate pencil drawing in perhaps one-half the time required for a mechanical drawing.

Tracing cloth is very sensitive to atmospheric changes, often expanding over night so as to require restretching. If the complete tracing cannot be finished during the day some views should be finished, and no figure left with only part of its lines traced. In making a large tracing, if cloth is used from the roll, it is well to cut off the piece required and lay it exposed flat for a short time before tacking it down.

Water will ruin a tracing, and moist hands or arms should not come in contact with the cloth. The habit should be formed of keeping the hands off drawings. It is a good plan, in both drawing and tracing on large sheets, to cut a mask of drawing paper to cover all but the view being worked on. Unfinished drawings should always be covered over night.

Sometimes it is desired to add an extra view, or a title, to a print without putting it on the tracing. This may be done by drawing the desired additions on another piece of cloth the same size as the original and printing the two tracings together.

Tracings may be cleaned of pencil marks and dirt by rubbing over with a rag or waste dipped in benzine or gasolene. To prevent smearing in cleaning, titles if printed from type on tracing cloth should be printed in an ink not affected by benzine. Local printers are often unable to meet this requirement, but there are firms which make a specialty of this kind of printing.

The starch may be washed from scrap tracing cloth to make penwipers or cloths.

The tracing is a "master drawing" and should never be allowed to be taken out of the office, but prints may be made from it by one of the processes described below. Any number of prints may be taken from one tracing.

Blue Printing.—The simplest of the printing processes is blue printing, made by exposing a piece of sensitized paper in contact with the tracing to sunlight or electric light in a printing frame made for the purpose. The blue print paper is a white paper free from sulphites, coated with a solution of citrate of iron and ammonia, and ferricyanide of potassium. On exposure to the light a chemical action takes place, which when fixed by washing in water gives a strong blue color. The parts protected from the light by the black lines of the tracing wash out, leaving the white paper. Blue print paper is usually bought ready sensitized, and may be had in different weights and different degrees of rapidity. When fresh it is of a yellowish-green color, and an unexposed piece should wash out perfectly white. With age or exposure to light or air, it turns to a darker gray-blue color, and spoils altogether in a comparatively short time. In some emergency, it may be necessary to prepare blue print paper. The following formula will give a paper requiring about three minutes' exposure in bright sunlight.

1. Citrate of iron and ammonia (brown scales) 2 oz., water 8 oz.
2. Red prussiate of potash 1½ oz., water 8 oz.

Keep in separate bottles away from the light.

To prepare paper take equal parts of (1) and (2) and apply evenly to the paper with a sponge or camel's-hair brush, by subdued light.

To Make a Blue Print.—Lay the tracing in the frame with the inked side toward the glass, and place the paper on it with its sensitized surface against the tracing. Lock up in the frame so there is a perfect contact between paper and cloth. See that no corners are turned under. Expose to the sunlight or electric light. If a frame having a hinged back is used, Fig. 515, one side may be opened for examination. When the paper is taken from the frame it will be a bluish-gray color with the heavier lines lighter than the background, the lighter lines perhaps not being distinguishable. Put the print for about five minutes in a bath

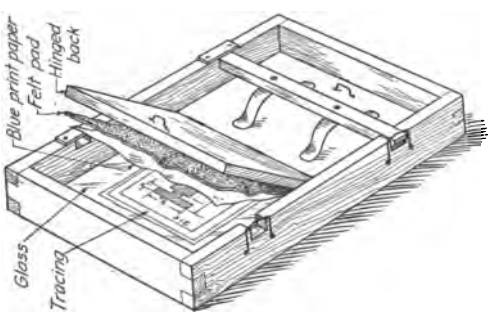

FIG. 515.—A blue print frame.

of running water, taking care that air bubbles do not collect on the surface, and hang up to dry. An overexposed print may often be saved by prolonged washing. The blue color may be intensified and the whites cleared by dipping the print for a moment into a bath containing a solution of potassium bichromate (1 to 2 oz. of crystals to a gallon of water), and rinsing

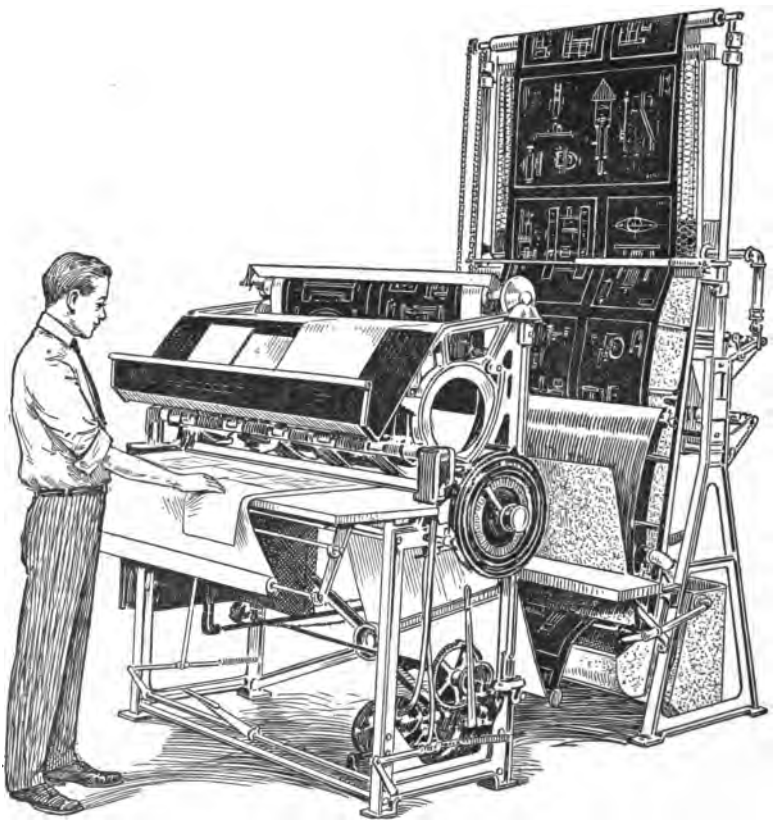

FIG. 516.[1]—Electric blue printing machine with washing and drying equipment.

thoroughly. This treatment will bring back a hopelessly "burned" print. Sodium bichromate is the generally used substitute since potash has become so scarce. Prints may be cleared successfully by dipping in a bath of hydrogen peroxide, 1 oz. to the gallon.

To be independent of the weather, most concerns use electric

[1] Manufactured by The C. F. Pease Company, Chicago.

printing machines, either cylindrical, in which a lamp is lowered automatically inside a glass cylinder about which the tracing and paper are held, or continuous, in which the tracing and paper are fed through rolls, and in some machines, printed, washed, "potashed" and dried in one operation. Fig. 516 is a machine of this type.

A clear blue print may be made from a typewritten sheet which has been written with a sheet of carbon paper back of it, so that it is printed on both sides.

In an emergency it is possible to make a fair print by holding tracing and paper to the sunlight against a window pane.

Blue print making is a recognized business, and blue-print concerns are found in every city. Many manufacturers and architects find it more satisfactory and economical to send their tracings out for blue or brown printing, than to maintain a blue print room.

Van Dyke paper is a thin sensitized paper which turns dark brown on exposure and fixing, which is done by first washing in water, then in a bath of hyposulphite of soda, and washing again thoroughly. A reversed negative of a tracing may be made on it by exposing with the inked side of the tracing next to the sensitized side of the paper. This negative, if printed on blue print paper will give a blue-line print with white background. The Van Dyke negative may be "transparentized" so as to print in one-half to one-third the time, by a solution sold by the dealers, or by a solution of paraffin cut in benzine.

Several direct blue-line and black-line papers are on the market. Prints on them cost about twice as much as ordinary blue prints, but all white-ground prints have the advantage that additions or notes may be made in ink or pencil, and that tints may be added.

Changes are made on blue prints by writing or drawing with any alkaline solution, such as of soda or potash, which bleaches the blue. Potassium oxalate is the best. A little gum arabic will prevent spreading. A tint may be given by adding a few drops of red or other colored ink to the solution. Chinese white is sometimes used for white-line changes on a blue print.

A blue print may be made from a drawing made in pencil or ink on bond paper or tracing paper, but with thick drawing paper the light will get under the lines and destroy the sharpness. A print may be made from Bristol or other heavy white

paper by turning it with the ink side against the paper, thereby reversing the print, or by making a Van Dyke negative, with a long exposure; or it may be soaked in benzine and printed while wet. The benzine will evaporate and leave no trace.

A blue-line print may be taken from a blue print by fading the blue of the first print in weak ammonia water, washing thoroughly, then turning it red in a weak solution of tannic acid, and washing again. Transparentizing at this stage will assist.

In printing a number of small tracings they may be fastened together at their edges with gummed stickers and handled as a single sheet.

Any white paper may be rendered sufficiently translucent to give a good blue print, with the "transparentizing solutions" mentioned before, enabling drawings to be made on white paper in pencil, from which finished prints can be made without inking or tracing. On such drawings arrowheads and dimensions are best put on in ink.

The methods of the hectograph or gelatine pad, neostyle, mimeograph, etc., often used for duplicating small drawings, are too well known to need description here.

Large drawings or drawings in sets are often photographed to reduced size and blue prints or other prints made from the negatives giving convenient prints for reference.

A direct photographic method for reproducing drawings and documents in white lines on a dark background is in use. The Rectigraph, the Photostat and the Cameragraph are machines used for this purpose.

Tracings are duplicated successfully, giving exact reproductions in black ink on tracing cloth or paper by a gelatine process in which a special "matrix" print is made on a blue print machine and transferred to a gelatine-surfaced table, the impression inked and prints pulled from it. The Janney process, manufactured by E. S. Holland & Co., Singer Building, New York, and the Eureka process of the Rexim Company, 908 Chestnut St., Philadelphia, are based on this principle.

Drawing for Reproduction.—By this term is meant the preparation of drawings for reproduction by one of the photo-mechanical processes used for making plates, or "cuts," as they are often called, for printing purposes. Such drawings will be required in the preparation of illustrations for books and periodicals, for

catalogues or other advertising, and incidentally for Patent Office drawings, which are reproduced by photo-lithography.

FIG. 517.—Drawing for one-half reduction.

Line drawings are usually reproduced by the process known as zinc etching, in which the drawing is photographed on a process plate, generally with some reduction, the negative film reversed and printed so as to give a positive on a sensitized zinc plate (when a particularly fine result is desired, a copper plate is used) which is etched with acid, leaving the lines in relief and giving, when mounted type-high on a wood base, a block which can be printed along with type in an ordinary printing press.

FIG. 518.—One-half reduction.

Drawings for zinc etching should be made on smooth white paper or tracing cloth in black drawing ink, and preferably larger than the required reproduction.

If it is desired to preserve the hand-drawn character of the

original, the reduction should be slight; but if a very smooth effect is wanted, the drawing may be as much as three or four times as large as the cut. The best general size is from one and one-half to two times linear. Fig. 517 illustrates the appearance of an original drawing and Fig. 518 the same drawing reduced

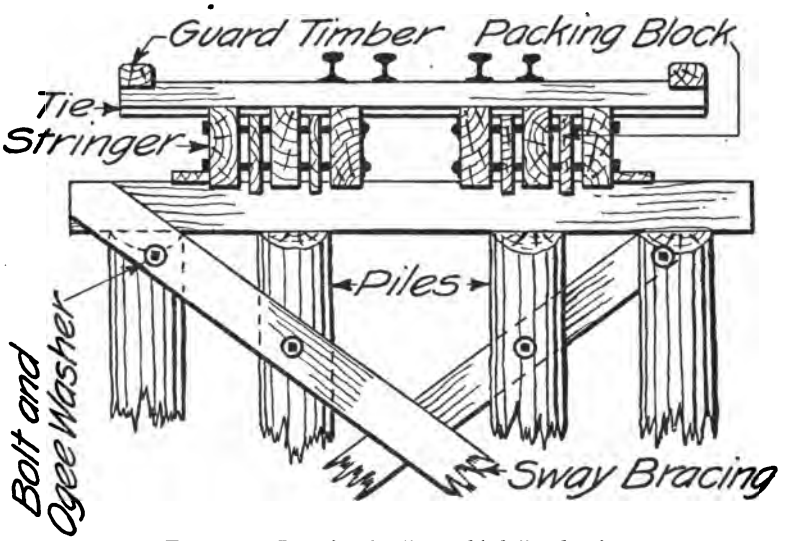

FIG. 519.—Drawing for "two-thirds" reduction.

one-half. Fig. 519 is another original which has been reduced two-thirds, fig. 520. The coarse appearance of these originals and the open shading should be noticed.

A reducing glass, a concave lens mounted like a reading glass is sometimes used to aid in judging the appearance of a drawing on reduction. If lines are drawn too close together the space between them will choke in the reproduction and mar the effect.

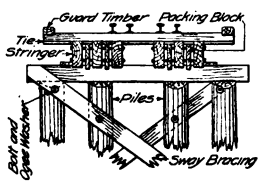

FIG. 520.—"Two-thirds" reduction.

One very convenient thing not permissible in other work may be done on drawings for reproduction—any irregularities may be corrected by simply painting out with water-color white. If it is desired to shift a figure after it has been inked it may be cut out and pasted on in the required position. The edges thus left will not trouble the engraver, as they will be tooled out when the etching is finished.

Wash drawings and photographs are reproduced in a similar way on copper by what is known as the half-tone process, in which the negative is made through a ruled "screen" in front of the plate, which breaks up the tints into a series of dots of varying size. Screens of different fineness are used for different kinds of paper, from the coarse screen newspaper half-tone of 80 to 100 lines to the inch, the ordinary commercial and magazine half-tone of 133 lines, to the fine 150 and 175 line half-tones for printing on very smooth coated paper.

Photographic prints for reproduction are often retouched and worked over, shadows being strengthened with water color, highlights accented with white, and details brought out that would otherwise be lost. In catalogue illustration of machinery, etc., objectionable backgrounds or other features can be removed entirely. Commercial retouchers use the air-brush as an aid

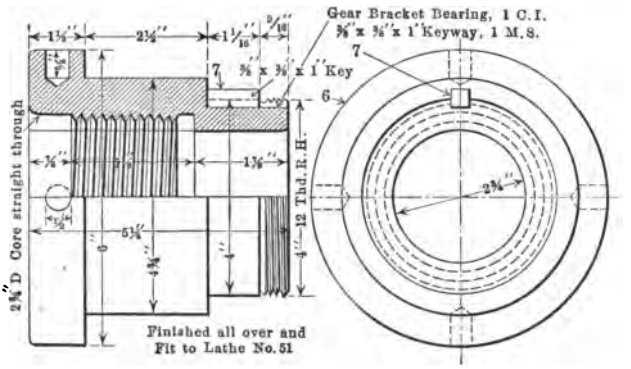

FIG. 521.—A wax plate.

in this kind of work, spraying on color with it very rapidly and smoothly and securing results not possible in hand work.

So-called "phantom drawings" or "X-ray drawings" are made in this way, sometimes using a double exposure negative as a basis.

The "Ben Day" film is another aid in commercial illustration that is used very extensively. Fig. 16 is a simple example.

Line illustrations are sometimes made by the "wax process" in which a blackened copper plate is covered with a very thin film of wax, on which a drawing may be photographed and its outline scratched through the wax by hand with different sized gravers. The lettering is set up in type and pressed into the

wax; more wax is then piled up in the wider spaces between the lines and an electrotype taken. Drawings for this process need not be specially prepared, as the work may be done even from a pencil sketch or blue print. Wax plates print very clean and sharp and the type-lettering gives them a finished appearance, but they lack the character of a drawing, are more expensive than zinc etching and often show mistakes due to the lack of familiarity of the engraver with the subject. Fig. 521 shows the characteristic appearance of a wax plate.

Maps and large drawings are usually reproduced by lithography, in which the drawing is either photographed or engraved on a lithographic stone, and transferred from this either to another stone from which it is printed or in the offset process to a thin sheet of zinc which is wrapped around a cylinder, and prints to a rubber blanket which in turn prints on the paper.

CHAPTER XVI

Shade Lines and Line Shading

Shade Lines.—The general practice in working drawings is to use a uniform bold full line for the visible outline. It is possible by using two weights of lines to add something to the clearness and legibility of a drawing, and at the same time to give to its appearance a relief and finish very effective and desirable in some classes of work. This is used to advantage in such cases as the illustrations seen in technical periodicals, where space is limited and where the definition of *shape* is the predominant feature. By the use of shade lines a single view will often serve the desired purpose, and can therefore be made to larger scale, with consequent clearness of detail.

Shade lines are required on Patent Office drawings, and are used in a few shops on assembly drawings, but for ordinary shop drawings the advantage gained is much overbalanced by the increased cost. It is correct to use them whenever the gain in legibility and appearance is of sufficient importance to warrant the expenditure of the added time and skill necessary.

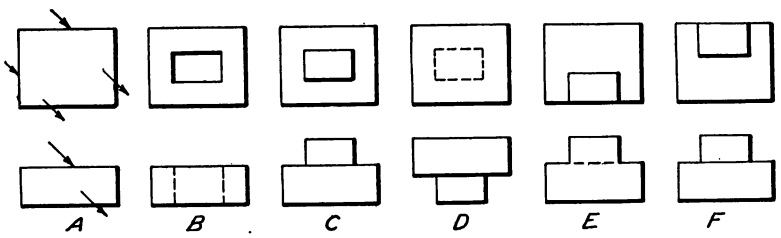

Fig. 522.—Conventional shade lines.

Theoretically the shade-line system is based on the principle that the object is illuminated from one source of light at an infinite distance, the rays coming from the left in the direction of the body diagonal of a cube, so that the two projections of any ray each make an angle of 45° with the ground line. Part of the object would thus be illuminated and part in shade, and a shade line is a line separating a light face from a dark face.

The strict application of this theory involves some trouble, and it is never followed out in practice but the one simple rule of shading the lower and right hand lines of all views is observed, Fig. 522. The method of determining which lines are shaded is illustrated in Fig. 523, which shows the treatment of lines representing surfaces parallel and nearly parallel to the direction of the light.

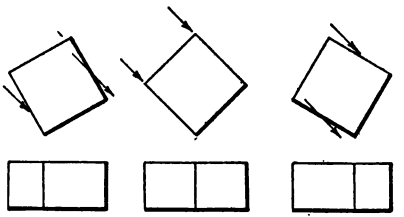

FIG. 523.—Determination of shade lines.

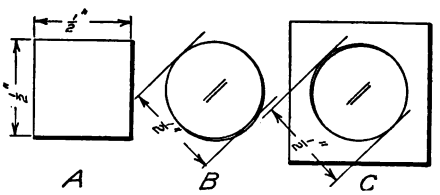

FIG. 524.—Measurements on shaded drawings.

The light lines should be comparatively fine and the shade lines about three times as wide. The width of the shade line is added outside the surface of the piece, Fig. 524. They are never drawn in pencil but their location may be indicated, if desired, by a mark on the line. The method of shading two pieces in combination is illustrated in Fig. 525. At *A* the faces of parts 1 and 2 are in the same plane, the line of the joint is consequently a fine line. At *B* and *C* the faces are not in the same plane.

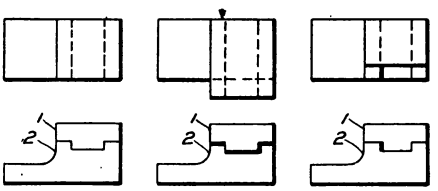

FIG. 525.—Shading two pieces in combination.

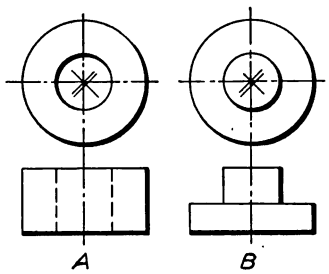

FIG. 526.—Shifting the center.

It will be observed that dotted lines are never shaded.

In inking a shaded drawing it is important to follow the order of inking carefully. Ink (1) light arcs, (2) light to heavy arcs, (3) heavy arcs, (4) light lines, (5) heavy lines.

A circle may be shaded by shifting the center on a 45° line toward the lower right hand corner, to an amount equal to the thickness of the shade line, and drawing

another semicircular arc with the same radius, Fig. 526; or it may be done much more quickly, particularly with small circles, after the "knack" has been acquired, by keeping the needle in the center after drawing the circle, and springing the needle point leg out and back gradually while going over the half to be shaded, pressing with the middle finger in the position of Fig. 527. Never shade a circle arc so that it appears heavier than the straight lines.

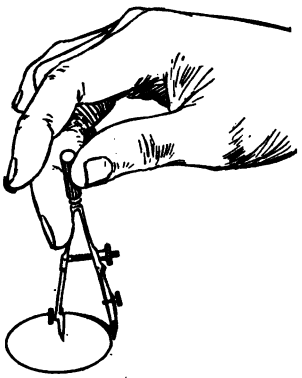

FIG. 527.—Springing the point.

A comparison of two drawings of the same object is shown in Fig. 528. By covering the lower views the aid in reading given by the shade lines will be apparent.

Shade lines in isometric drawing have no value so far as aiding in the reading is concerned, but they may by their contrast add

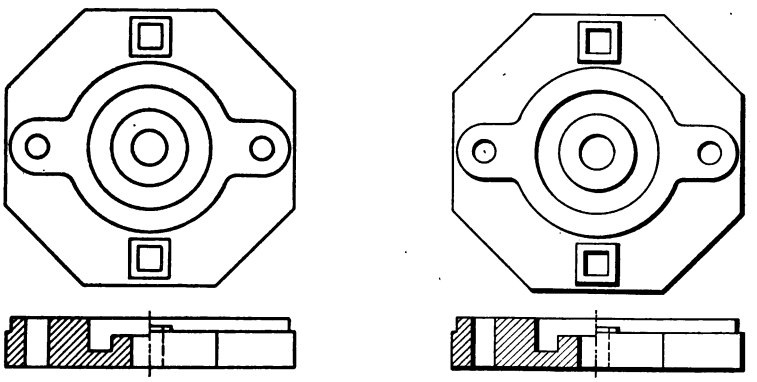

FIG. 528.—Effect of shade lines.

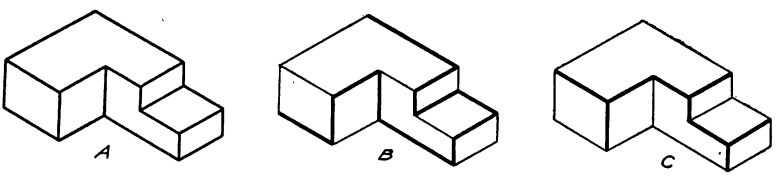

FIG. 529.—Methods of shading isometric drawing.

some attractiveness to the appearance. Assuming the light as coming from the left in the direction of the body diagonal of

the isometric cube, and disregarding shadows, shade lines separating light from dark faces would appear as at *B* in Fig. 529. Another method popular among patent draftsmen and others using this kind of drawing for illustration is to bring out the nearest corner with heavy lines as at *C*.

Line Shading.—Line shading is a method of representing the effect of light and shade by ruled lines. It is an accomplishment not usual among ordinary draftsmen as it is not used on working drawings and the draftsman engaged in that work does not have occasion to apply it. It is used on display drawings, illustrations, Patent Office drawings and the like, and is worthy of study if one is interested in this class of finished work.

To execute line shading rapidly and effectively requires continued practice and some artistic ability, and, as much as anything else, good judgment in knowing when to stop. Often the simple shading of a shaft or other round member will add greatly to the effectiveness of a drawing and may even save making another view; or a few lines of "surface shading" on a flat surface will show its position and character. The pen must be in perfect condition, with its screw working very freely.

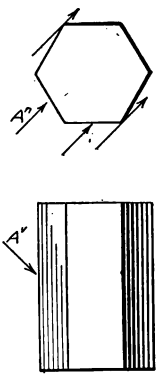

FIG. 530.

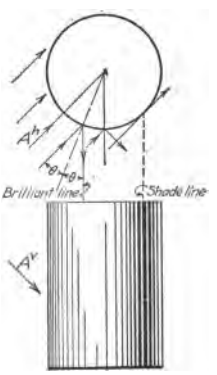

FIG. 531.

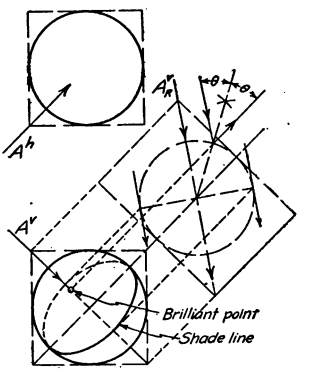

FIG. 532.

The theory of line shading.

Theory of Line Shading.—The theoretical direction of the light is, as already mentioned, in the direction of the body diagonal of a cube. Thus the two projections of a ray of light would be as A^h and A^v Fig. 530, and two visible faces of the hexagonal prism would be illuminated, while one is in shade. It is immediately observed that the theoretical shade lines differ from the

conventional ones as used in the preceding discussion. The figure illustrates the rule that *an inclined illuminated surface is lightest nearest the eye and an inclined surface in shade is darkest nearest the eye.*

A cylinder would be illuminated as in Fig. 531. Theoretically the darkest place is at the tangent or "shade line" and the lightest part at the "brilliant line" where the light is reflected directly

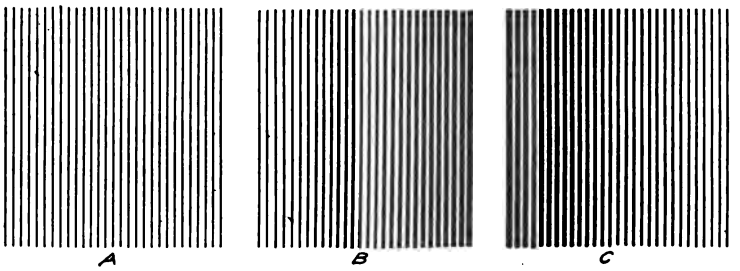

FIG. 533.—Flat and graded tints.

to the eye. Cylinders shaded according to this theory are the most effective, but often in practice the dark side is carried out to the edge, and in small cylinders the light side is left unshaded.

A method of finding the brilliant point and shade line of a sphere is shown in Fig. 532. An auxiliary view of the sphere and circumscribing cube is taken parallel to the body diagonal of the cube, and the angle between the ray of light and the center line to the eye bisected, giving the brilliant point. Tangents locate the shade line.

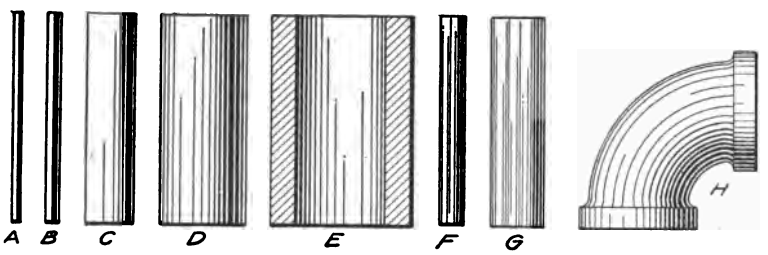

FIG. 534.—Cylinder shading.

Practice.—Three preliminary exercises in flat and graded tints are given in Fig. 533. In these the pitch, or distance from center to center of lines is equal. In wide-graded tints as *B* and *C* the setting of the pen is not changed for every line, but several lines are drawn, then the pen changed and several more drawn.

Fig. 534 is a row of cylinders of different sizes. The effect of polish is given by leaving several brilliant lines, as might occur if the light came in through several windows. A conical surface

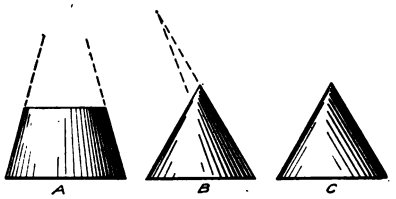

FIG. 535.—Cone shading.

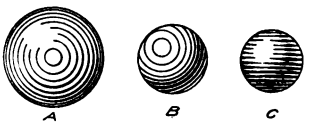

FIG. 536.—Sphere shading.

may be shaded by driving a fine needle at the apex and swinging a triangle about it as in *A*, Fig. 535. To avoid a blot at the apex of a complete cone the needle may be driven on the extension of the side as in *B* or the lines may be drawn parallel to the sides as in *C*.

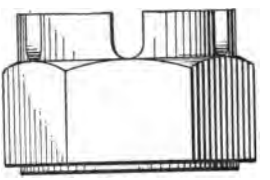

FIG. 537.

It is in the attempt to represent double-curved surfaces that the line-shader meets his principal troubles. The brilliant line becomes a brilliant point and the tangent shade line a curve, and to represent the gradation between them by mechanical lines is a difficult proposition.

Three methods of shading a sphere are shown in Fig. 536. The first one, *A* is the commonest. Concentric circles are drawn from

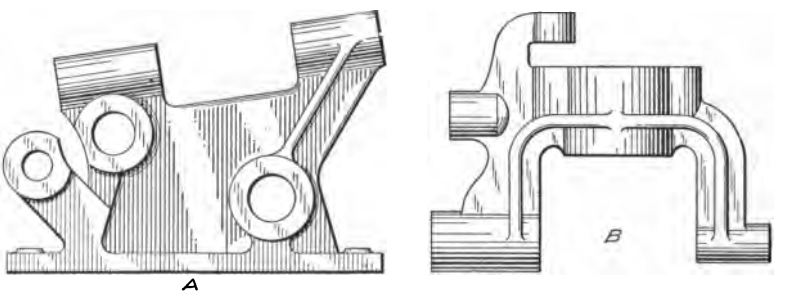

FIG. 538.—Application of line shading.

the center, with varying pitch, and shaded on the lower side by springing the point of the compasses. At *B* the brilliant point, usually "guessed in," is used as a center. At *C*, the "wood cut" method, the taper on the horizontal lines is made by starting

with the pen out of the perpendicular plane and turning the handle up as the line progresses.

Applications of shading on flat and cylindrical surfaces are shown in Figs. 537 and 538; spherical surfaces in Fig. 539, and knurling in Fig. 540.

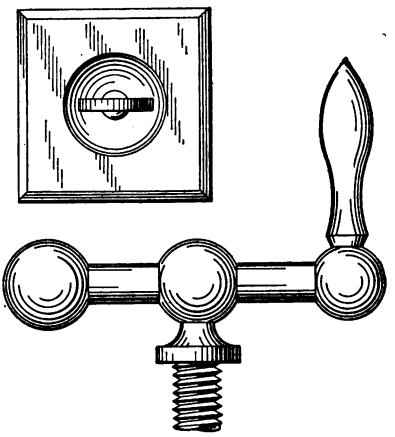

Fig. 539.—Shaded double curved surfaces.

Patent Office Drawings.— In the application for letters patent on an invention or discovery there is required a written description called the specification, and in case of a machine, manufactured article, or device for making it, a drawing, showing every feature of the invention. If it is an improvement, the drawing must show the invention separately, and in another view a part of the old structure with the invention attached. A high standard of execution, and conformity to the rules of the Patent Office must be observed. A pamphlet called the "Rules of Practice," giving full information and rules governing Patent Office procedure in reference to application for patents may be had gratuitously by addressing the *Commissioner of Patents, Washington, D. C.*

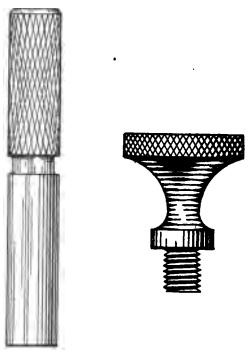

Fig. 540.—Knurling.

The drawings are made on smooth white paper specified to be of a thickness equal to three-sheet Bristol-board. Two-ply Reynolds board is the best paper for the purpose, as prints may be made from it readily, and it is preferred by the Office. The sheets must be exactly 10 by 15 inches, with a border line one inch from the edges. Sheets with border and lettering printed, as Fig. 541, are sold by the dealers, but are not required to be used. A space of not less than 1¼ inches inside of the top border must be left blank for the printed title added by the Office.

Drawings must be in black ink, and drawn for a reproduction

to reduced scale. As many sheets as are necessary may be used. In the case of large views any sheet may be turned on its side so that the heading is at the right and the signatures at the left, but all views on the same sheet must stand in the same direction.

Patent Office drawings are not working drawings. They are descriptive and pictorial rather than structural, hence will have no center lines, no dimension lines nor figured dimensions, no notes nor names of views. The scale chosen should be large enough to show the mechanism without crowding. Unessential details or shapes need not be represented with constructional accuracy, and parts need not be drawn strictly to scale. For example, the section of a thin sheet of metal drawn to scale might be a very thin single line, but it should be drawn with a double line, and section lined between.

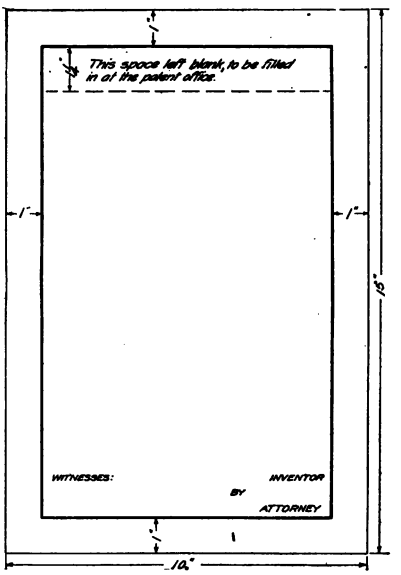

FIG. 541.—Blank for patent drawing.

Section lining must not be too fine. One-twentieth of an inch pitch is a good limit. Solid black should not be used excepting to represent insulation or rubber. Shade lines are always added, except in special cases where they might confuse or obscure instead of aid in the reading. Surface shading by line shading is used whenever it will add to the legibility, but it should not be thrown in indiscriminately or lavishly simply to please the client.

Gears and toothed wheels must have all their teeth shown, and the same is true of chains, sprockets, etc., but screw threads may be represented by the conventional symbols. The *Rules of Practice* gives a chart of electrical symbols, symbols for colors, etc., which should be followed.

The drawings may be made in orthographic, axonometric, oblique, or perspective. The pictorial system is used extensively, for either all or part of the views. The examiner is of course expert in reading drawings, but the client, and sometimes

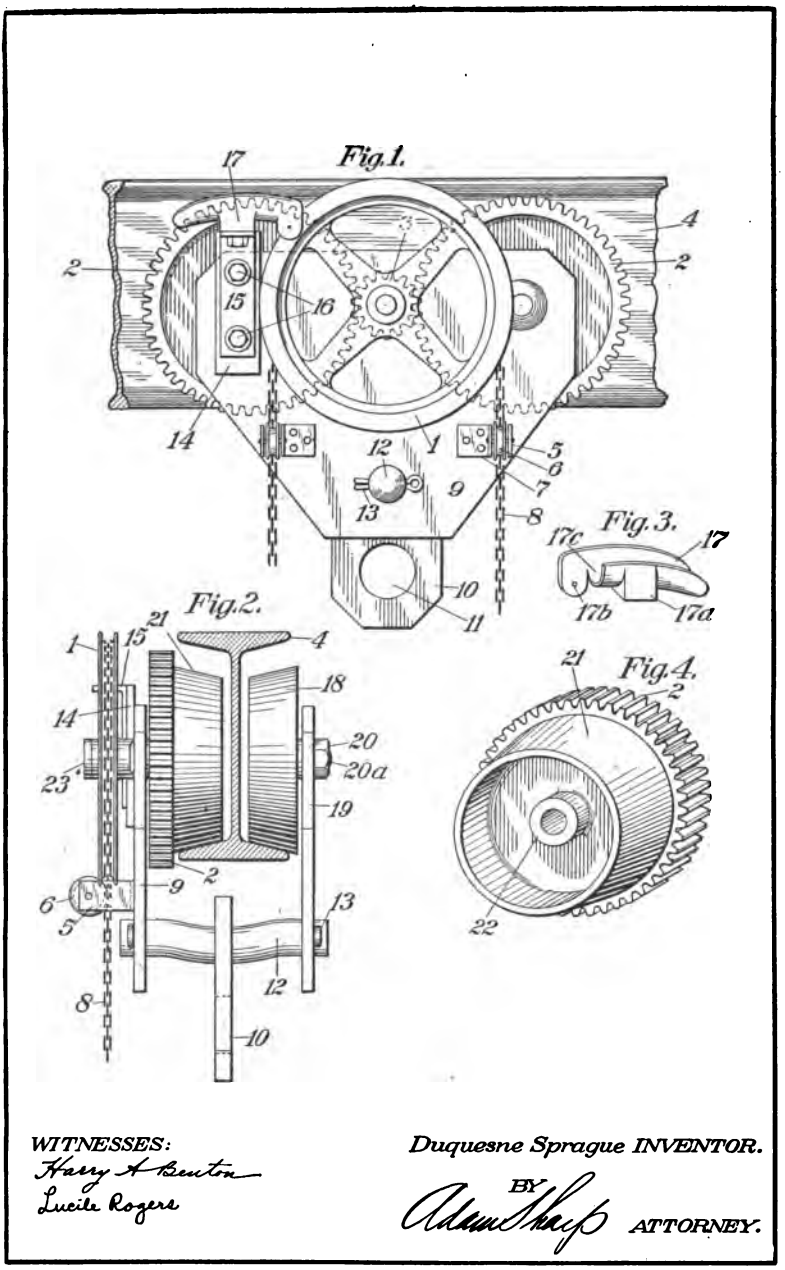

FIG. 542.—A patent office drawing (reduced one-half).

the attorney, may not be, and the drawing should be clear to them. In checking the drawing for completeness it should be remembered that in case of litigation it may be an important exhibit in the courts. Only in rare cases is a model of an invention required by the Office.

The views are lettered "Fig. 1," "Fig. 2," etc., and the parts designated by reference numbers through which the invention is described in the specifications. One view, generally "Fig. 1," is made as a comprehensive view that may be used in the Official Gazette as an illustration to accompany the "claims."

The draftsman usually signs the drawing as the first witness. The inventor signs the drawing in the lower right hand corner. In case an attorney prepares the application and drawing, the attorney writes or letters the name of the inventor, signing his own name underneath as his attorney.

To avoid making tack holes in the paper it should be held to the board by the heads of the thumb tacks only.

The requirements for drawings for foreign patents vary in different countries, most countries requiring drawings and several tracings of each sheet.

Fig. 542 is an example of a Patent Office drawing, reduced to one-half size.

CHAPTER XVII

Notes on Commercial Practice

There are many items of practical information of value to the student and draftsman which are not included in the ordinary course in drawing, but are learned through experience. This chapter tells approved methods of accomplishing a few of the things necessary in the commercial uses of drawing. It is not intended to be complete, but suggests kinds of information which are worth collecting and preserving in notebook form.

To Sharpen a Pen.—Pens that are in constant use require frequent sharpening and every draftsman should be able to keep his own pens in fine condition. The points of a ruling pen should

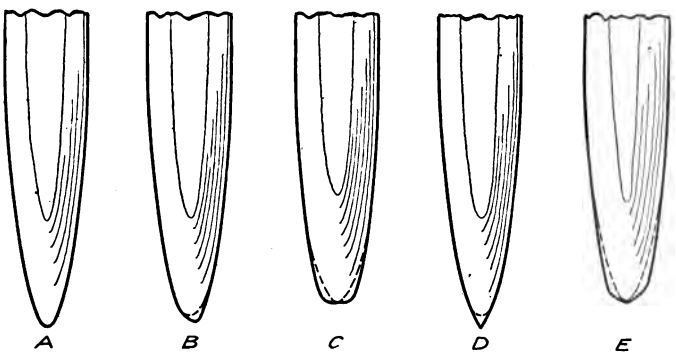

Fig. 543.—Corrected ruling pen points.

have an oval or elliptical shape as *A*, Fig. 543, with the nibs exactly the same length. *B* is a worn pen and *C*, *D* and *E* incorrect shapes sometimes found. The best stone to use is a hard Arkansas knife piece or knife edge. It is best to soak a new stone in oil for several days before using. The ordinary carpenter's oil stone is too coarse to be used for instruments.

The nibs must first be brought to the correct shape as *A* and as indicated on the dotted lines of *B*, *C* and *D*. This is done by screwing the nibs together until they touch and, holding the pen as in drawing a line, drawing it back and forth on the stone,

starting the stroke with the handle at perhaps 30 degrees with the stone, and swinging it up past the prependicular as the line across the stone progresses. This will bring the nibs to exactly equal shape and length, leaving them very dull. They should then be opened slightly and each blade sharpened in turn until the bright spot on the end has just disappeared, holding the pen as in Fig. 544 at a small angle with the stone and rubbing it back and forth with a slight oscillating or rocking motion to conform to the shape of the blade. The pen should be examined frequently and the operation stopped just when the reflecting spot has vanished. A pocket magnifying glass may be of aid in examining the points. The blades should not be sharp enough to cut the paper when tested by drawing a line, without ink, across it. If over sharpened the blades should again be brought to touch and a line drawn very lightly across the stone as in the first operation. When tested with ink the pen should be capable of drawing clean sharp lines down to the finest hair line. If these finest lines are ragged or broken the pen is not perfectly sharpened. It should not be necessary to touch the inside of the blades unless a burr has been formed, which might occur with very soft metal or by using too coarse a stone. In such cases the blades should be opened wide and the burr removed by a very light touch, with the entire inner surface of the blade in contact with the stone, which of course must be sufficiently thin to be inserted between the blades. The beginner had best practise by sharpening several old pens before attempting to sharpen a good instrument. After using, the stone should be wiped clean and a drop of oil rubbed over it to prevent hardening and glazing.

FIG. 544.—Sharpening a pen.

Stretching Paper.—If a drawing is to be tinted the paper should be stretched on the board. First, dampen it thoroughly until limp, either with a sponge or under the faucet, then lay it on the drawing board face down, take up the excess water from the edges with a blotter, brush glue or paste about one-half inch wide around the edge, turn over and rub the edges down on the board until set, and allow to dry horizontally.

Drawings or maps on which much work is to be done, even though not to be tinted, may be made advantageously on stretched paper; but Bristol or calendered paper should not be stretched.

Tinting is done with washes made with moist water colors. The drawing may be inked (with waterproof ink) either before, or preferably after tinting. The drawing should be cleaned and the unnecessary pencil marks removed with a very soft rubber, the tint mixed in a saucer and applied with a camel's-hair or sable brush, inclining the board and flowing the color with horizontal strokes, leading the pool of color down over the surface, taking up the surplus at the bottom by wiping the brush out quickly and picking up with it the excess color. Stir the color each time the brush is dipped into the saucer. Tints should be made in light washes, depth of color being obtained if necessary by repeating the wash. To get an even color it is well to go over the surface first with a wash of clear water.

Diluted colored inks may be used for washes instead of water color.

Mounting Tracing Paper.—Tracings are mounted for display, on white mounts, either by "tipping" or "floating." To tip a drawing, brush a narrow strip of glue or paste around the under edge, dampen the right side of the drawing by stroking with a sponge very slightly moistened, and stretch the paper gently with the thumbs on opposite edges, working from the middle of the sides toward the corners.

To float a drawing make a *very thin* paste and brush a light coat over the entire surface of the mount, lay the tracing paper in position and stretch into contact with the board as in tipping. If air bubbles occur force them out by rubbing from the center of the drawing out, laying a piece of clean paper over the drawing to protect it.

Mounting on Cloth.—As a protection to maps and drawings requiring much handling it is advisable to mount them on cloth. The method to be used depends largely upon the weight and quality of the material to be mounted. A method suitable for one case might fail in another, but having a general idea of the requirements it is possible to vary the method to suit the case. There are two methods used, hot mounting and cold mounting. The adhesives used are photo library paste and liquid glue. The commercial products of each are so easily obtained that a

formula for their preparation is unnecessary and the ones to be used are largely a matter of choice and availability.

Hot mounting is the most satisfactory for the average work because of the saving in time. The mounting cloth is usually a first grade of white, light weight, sheeting. For small work dust-colored dress lining is well suited. This is stretched tightly, and tacked down, over a table which has been previously covered with cloth. The paste is prepared by heating with a small amount of water until the solution becomes clear. With a broad flat brush paste the back of the print quickly, working from the center toward the edges. Allow a moment for uniform expansion, then place face up on the cloth. Have iron hot enough not to scorch, work quickly with rotary motion and iron print from center out until edges are stuck. Remove tacks and raise from table to release steam. Iron until dry. Never iron on the back, as the steam formed will cause blisters. Keep the iron well paraffined and a good gloss will be produced on the print. Liquid glue diluted and heated will work quite as well, but the sheet will not be so flexible and will break if folded too often.

Cold paste may be used instead of hot and is quite satisfactory. The method is practically the same except that a photographic print roller is substituted for the hot iron and the print is allowed to become thoroughly dry before the tacks are removed.

For Mounting Thin Paper.—The cloth is tacked down same as for hot or cold mounting except that several thicknesses of newspaper are placed directly under the cloth. The hot paste is applied directly to the cloth until the cloth is thoroughly filled with paste. The print to be mounted is rolled, face in, from each end toward the center leaving an equal amount of paper in each roll. With one roll in each hand place the print in the center of the pasted area, allowing only a few inches to unroll. Iron quickly same as for hot mounting, unrolling the print as the ironing proceeds.

Another successful method consists in rolling the print to be mounted, face in, on a roll of detail paper. Hot paste is applied beginning at one end, the print rolled off on the cloth, and followed up as fast as unrolled by a hot iron. It is inadvisable to apply the paste to thin paper, unless supported as above, for it curls up so rapidly that it becomes unmanageable and results in the loss of the print.

Methods of Copying Drawings—Pricking.—Drawings are often copied on opaque paper by laying the drawing over the paper and pricking through with a needle point, turning the upper sheet back frequently and connecting the points. Prickers may be purchased, or may be made easily by forcing a fine needle into a soft wood handle. They may be used to advantage also in accurate drawing, in transferring measurements from scale to paper.

Transfer by Rubbing.—This method is used extensively by architects, and may be used to good advantage in transferring any kind of sketch or design to the paper on which it is to be rendered.

The original is made on any paper, and may be worked over, changed, and marked up until the design is satisfactory. Lay a piece of tracing paper over the original and trace the outline carefully. Turn the tracing over and retrace the outline just as carefully on the other side, using a medium soft pencil with a *sharp* point. Turn back to first position and tack down smoothly over the paper on which the drawing is to be made, registering the tracing to proper position by center or reference lines on both tracing and drawing. Now transfer the drawing by rubbing the tracing with the rounded edge of a knife handle or other instrument (a smooth-edged coin held between thumb and forefinger and scraped back and forth is commonly used), holding a small piece of tracing cloth with smooth side up between the rubbing instrument and the paper, to protect the paper. Do not rub too hard, and be sure that neither the cloth nor paper move while rubbing. Very delicate drawings can be copied with great accuracy in this manner.

If the drawing is symmetrical about any axis the reversed tracing need not be made, but the rubbing can be made from the first tracing by reversing it about the axis of symmetry.

Several rubbings can be made from one tracing, and when the same figure or detail must be repeated several times on a drawing much time can be saved by drawing it on tracing paper and rubbing it in the several positions.

A very fine transfer of small details may be made by the engraver's method of tracing on a thin sheet of celluloid, scratching the outline lightly with a sharp point, and rubbing colored crayon into the lines.

A Glass Drawing Board.—A successful device for copying

drawings on opaque paper is illustrated in Fig. 545. A wide frame of white pine carrying a piece of plate glass set flush with the top, is hinged to a base lined with bright tin. A sliding bar carries two show-case lamps, whose light may thus be concentrated under any part of the drawing. Ventilation and protection from overheating is provided by the ground glass and air space between it and the plate glass.

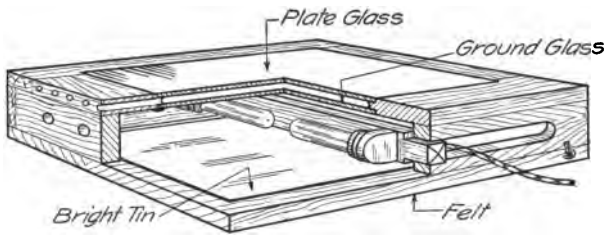

FIG. 545.—A glass drawing board.

The frame has a piece of felt glued on the bottom and may be used on the top of any table where connection with an electric light outlet is convenient. Drawings even in pencil may be copied readily on the heaviest paper or Bristol-board by the use of this device.

Proportional Methods—The Pantograph.—The principle of the pantograph, used for reducing or enlarging drawings in any proportion, is well known. Its use is often of great advantage. It consists essentially of four bars, which for any setting must form a parallelogram, and have the pivot, tracing point, and marking point in a straight line; and any arrangement of four arms conforming to this requirement will work in true proportion. Referring to Fig. 546 the scale of enlargement is PM/PT or AM/AB. For corresponding reduction the tracing point and marking point are exchanged. The inexpensive wooden form of Fig. 546 is sufficiently accurate for ordinary outlining. A suspended pantograph with metal arms, for accurate engineering work, is shown in Fig. 547.

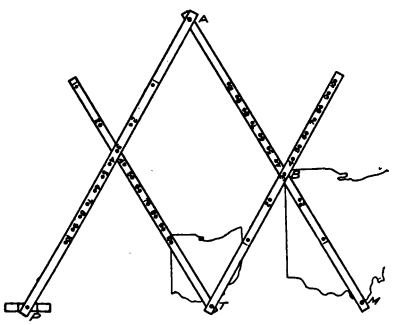

FIG. 546.—A pantograph.

Drawings may be copied to reduced or enlarged scale by using the **proportional dividers,** as illustrated in Fig. 19.

The well-known method of **proportional squares** is often used for reduction or enlargement. The drawing to be copied is ruled

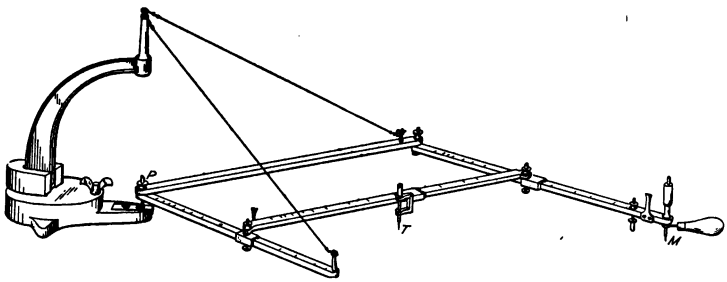

FIG. 547.—A suspended pantograph.

in squares of convenient size, or, if it is undesirable to mark on the drawing, a sheet of ruled tracing cloth or celluloid is laid over it, and the copy made freehand on the paper, which has been ruled in corresponding squares, larger or smaller, Fig. 548.

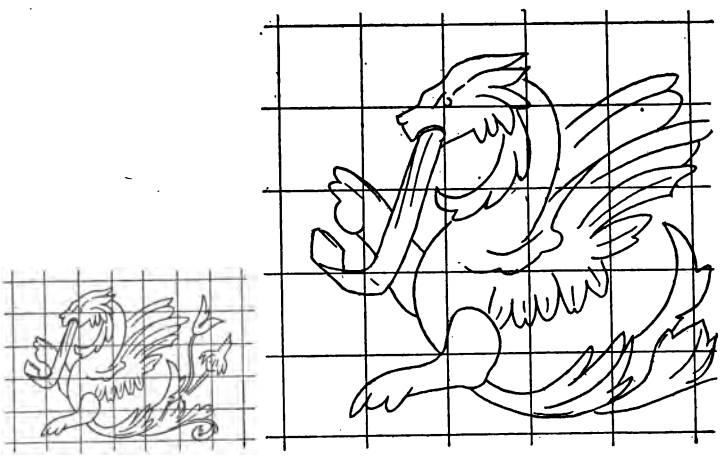

FIG. 548.—Enlargement by squares.

Preserving Drawings.—A drawing, tracing, or blue print which is to be handled much may be varnished with a thin coat of white shellac.

Pencil drawings may be sprayed with fixatif.

Prints made on sensitized cloth will withstand hard usage.

Blue prints for shop use are often mounted for preservation and convenience, by pasting on tar board or heavy press-board and coating with white shellac or Damar varnish. A coat of white glue under the varnish will aid still further in making the drawings washable.

Tracings to which more or less frequent reference will be made should be filed flat in shallow drawers. Sets of drawings preserved only for record are often kept in tin tubes numbered and filed systematically. A pasteboard tube with screw cover is also made for this purpose. It is lighter than tin and withstands fire and water even better.

Fireproof storage vaults should always be provided in connection with drafting rooms.

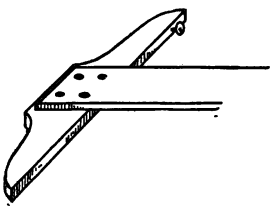

FIG. 549.—Temporary adjustment.

Various Devices.—A temporary adjustment of a T-square may be made by putting a thumb tack in the head, Fig. 549.

If much ruling in red ink is done, a pen for the purpose with german silver blades is advisable.

A steel edge to a drawing board is made of an angle iron planed straight and set flush with the edge. With this edge and a steel T-square very accurate plotting may be done. These are often used in bridge offices.

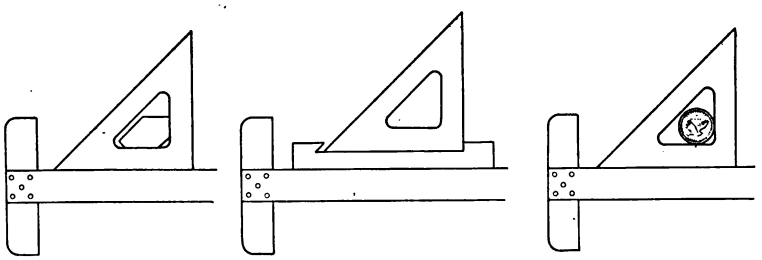

FIG. 550.—Section lining devices.

Three ways of making a section liner out of an ordinary triangle are shown in Fig. 550. The first two may be made of thin wood or celluloid cut in the shapes indicated, and used by slipping the block and holding the triangle, then holding the block and moving the triangle. A coin may be used for the same purpose.

Double triangles are very convenient in making pictorial drawings. Two forms are shown in Fig. 551, one for dimetric and one for isometric.

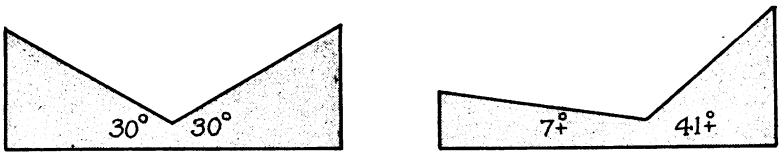

FIG. 551.—Double triangles.

If the glaze is removed from an irregular curve by rubbing with fine sandpaper, pencil marks may be made on it to facilitate drawing symmetrical curves or repeating the same curve.

CHAPTER XVIII

Bibliography of Allied Subjects

The present book has been written as a general treatise on the language of Engineering Drawing. The following short classified list of books is given both to supplement this book, whose scope permitted only the mention or brief explanation of some subjects, and as an aid to those who might desire the recommendation of a book on some branch of drawing or engineering.

Architectural Drawing

Ware, Wm. R.—The American Vignola, 2 v. Part I, The Five Orders, 76 pp. 18 pl. $2.50. Part II, Arches and Vaults, Roofs and Domes, Doors and Windows, etc. 50 pp., 19 pl. $2.50. International Textbook Co., Scranton, Pa., 1906.

Martin, Clarence A.—Details of Building Construction. 33 pl. $2.00. W. T. Comstock, N. Y., 1916.

Snyder, Frank M.—Building Details. Issued in parts of 10 pl. each, 16 × 22. $3.00. N. Y., 1906–13. Selections of fully dimensioned details principally of large buildings, from the drawings of various representative architects.

French and Ives.—Agricultural Drawing and the Design of Farm Structures. 130 pp. $1.25. McGraw-Hill Book Co., N. Y., 1915.

Descriptive Geometry

Anthony and Ashley.—Descriptive Geometry. 134 pp. 34 pl. $2.00. D. C. Heath & Co., Boston, 1909.

Church, Albert E.—Elements of Descriptive Geometry. 286 pp. rev. ed. $2.25. Am. Book Co., N. Y., 1911. This book has been a standard ever since its original publication in 1864. The present revision is by Geo. M. Bartlett.

Higbee, F. G.—The Essentials of Descriptive Geometry. 218 pp. $1.80. Wiley & Sons, N. Y., 1917.

Smith, Wm. G.—Practical Descriptive Geometry. 256 pp. $2.00. McGraw-Hill, 1916.

Gears and Gearing

Anthony, G. C.—The Essentials of Gearing. 109 pp. 15 folding pl. $1.50. D. C. Heath, 1911. An elementary text-book on the drawing of tooth outlines.

LOGUE, CHARLES H.—American Machinist Gear Book. 348 pp. $2.50. McGraw-Hill, 1910. "Simplified tables and formulas, and practical points in cutting all commercial types of gears."

Graphic Statics

CATHCART and CHAFFEE.—Course of Graphic Statics applied to Mechanical Engineering. 320 pp. $3.00. D. Van Nostrand & Co., N. Y., 1912.

Handbooks

A great many "pocket size" handbooks, with tables, formulas, and information are published for the different branches of the engineering profession, and draftsmen keep the ones pertaining to their particular line at hand for ready reference. Attention is called, however, to the danger of using handbook formulas and figures without understanding the principles upon which they are based. "Handbook designer" is a term of reproach applied not without reason to one who depends wholly upon these aids without knowing their theory or limitations.

Among the best known of these reference books are the following:

American Civil Engineers' Pocket Book, Mansfield Merriman, Ed.-in-chief. 3d. ed. 1571 pp. $5.00. Wiley, 1916.

American Machinists' Handbook and Dictionary of Shop Terms, by F. H. Colvin and Frank A. Stanley. 2d ed. 673 pp. $3.00. McGraw-Hill, 1914.

Architects' and Builders' Pocketbook, F. E. Kidder. 16th ed. 1816 pp. $5.00. Wiley, 1916.

Cambria Steel—A Handbook of Information Relating to Structural Steel Manufacture by the Cambria Steel Co. 11th ed. 513 pp. $1.25. Johnstown, Pa., 1916.

Carnegie—Pocket Companion Containing Useful Information and Tables Appertaining to the use of Steel as manufactured by the Carnegie Steel Co. 19th ed. 440 pp. $1.00. Pittsburgh, 1917.

Catalogue of Bethlehem Structural Shapes Manufactured by Bethlehem Steel Co. 72 pp. Bethlehem, Pa., 1909.

Civil Engineers' Pocketbook, J. C. Trautwine. 19th ed. 1257 pp. $5.00. Trautwine Co., Philadelphia, 1913.

Electrical Engineers' Pocketbook, H. A. Foster. 7th ed. 1599 pp. $5.00. Van Nostrand, 1913.

Handbook of Cost Data, H. P. Gillette. 2d ed. 1854 pp. $5..00. Myron C. Clark, Chicago, 1914.

Machinery's Handbook. 1400 pp. $5.00. Industrial Press, N. Y., 1914.

Mechanical Engineers' Handbook, Lionel S. Marks, Ed.-in-chief. 1800 pp. $5.00. McGraw-Hill, 1917.

Mechanical Engineers' Pocketbook, Wm. Kent. 9th ed. 1526 pp. $5.00. Wiley, 1916.

Standard Handbook for Electrical Engineers, Frank F. Fowle, Editor. 4th ed. 2000 pp. $5.00. McGraw-Hill, 1917.

Lettering

FRENCH AND MEIKLEJOHN.—The Essentials of Lettering. 94 pp. $1.00. McGraw-Hill, 1912.

REINHARDT, CHAS. W.—Lettering for Draftsmen, Engineers and Students. 39 pp. 15 pl. $1.00. Van Nostrand, 1917.

Machine Drawing and Design

KIMBALL AND BARR.—Elements of Machine Design. 446 pp. $3.00. Wiley, 1909.

LEUTWILER, O. A.—Elements of Machine Design. 607 pp. $4.00. McGraw-Hill, 1917. "A discussion of the fundamental principles involved in the design and operation of machinery."

MARSHALL, W. C.—Elementary Machine Drawing and Design. 320 pp. $3.00. McGraw-Hill, 1912.

SPOONER, HENRY J.—Machine Design, Construction, and Drawing. 746 pp. $3.50. Longmans, Green, N. Y., 1914.

UNWIN, WILLIAM C. -Elements of Machine Design. Part I, General Principles, Fastenings and Transmission Machinery. 531 pp. $2.50. Longmans, Green, 1909. Part II, Engine Details. 426 pp. $3.00. Longmans, Green, 1917.

Mechanism

DUNKERLEY, S.—Mechanism. 448 pp. $3.00. Longmans, Green, 1911.

ROBINSON, S. W.—Principles of Mechanism. A Treatise on the Modification of Motion, by means of the elementary combinations of Mechanism, or of the parts of Machines. 309 pp. $3.00. Wiley, 1900.

Perspective

FREDERICK, F. F.—Simplified Mechanical Perspective. 54 pp. 75 cents. The Manual Arts Press, Peoria, Ill., 1909.

LUBSCHEZ, B.—Perspective. 100 pp. $1.50. Van Nostrand, 1915.

WARE, WM. R.—Modern Perspective. 336 pp. and atlas of plates. $4.00. Macmillan & Co., N. Y., 1900.

Piping

SVENSEN, CARL L.—A Handbook on Piping. 359 pp. 8 folding pl. $4.00. Van Nostrand, 1918.

Rendering

FREDERICK, F. F.—The Wash Method of Handling Water Color. 16 pp. 50 cents. Manual Arts Press, 1908.

MAGINNIS, C. D.—Pen Drawing. 130 pp. $1.00. Bates & Guild, Boston, 1904.

Shades and Shadows

MCGOODWIN, HENRY.—Architectural Shades and Shadows. 118 pp. $3.00. Bates & Guild, 1904.

Sheet Metal

KIDDER, FRED S.—Triangulation Applied to Sheet Metal Pattern Cutting. 268 pp. $2.50. Sheet Metal Publication Co., N. Y., 1917.

KITTREDGE, GEO. W.—The New Metal Worker Pattern Book. 534 pp. $5.00. U. P. C. Book Co., N. Y., 1917. An exhaustive treatise on the principles and practice of pattern cutting as applied to sheet metal work.

Structural Drawing and Design

BURT, H. J.—Steel Construction. 372 pp. $2.75. Amercian Tech. Soc., Chicago, 1914. A book for architects.

KETCHUM, MILO S.—Structural Engineers' Handbook. 900 pp. $5.00. McGraw-Hill, 1914.

MORRIS, CLYDE T.—Designing and Detailing of Simple Steel Structures. 260 pp. $2.25. McGraw-Hill, 1914. A clear and concise text for both students and practical men.

Technic and Standards

FOLLOWS, GEO. H.—Universal Dictionary of Mechanical Drawing. 60 pp. 23 pl. $1.00. McGraw-Hill, 1906.

REINHARDT, CHARLES W.—The Technic of Mechanical Drafting. 42 pp. 11 pl. $1.00. McGraw-Hill, 1909.

Topographical Drawing

DANIELS, FRANK T.—A Textbook of Topographical Drawing. 144 pp. $1.50. D. C. Heath, 1908. A well-arranged book on ink and color topography, with practical problems.

STUART, E. R.—Topographical Drawing. 119 pp. $2.00. McGraw-Hill, 1917. "This text is designed as a basis for a course of instruction and practice in topographical drawing."

APPENDIX

Tapers.—For cylindrical shapes taper means the difference in diameter for a given length. Thus for a taper of ½″ per foot there would be a change in diameter of ½ inch, as, small diam. 1¼″, length 12″ large diam. 1¾.″ For rectangular sections the same principle applies, whether the slope is on one side or both sides, as at *B* or *C*. When a standard taper is used it is designated by a number which fixes the three dimensions. Machinists' handbooks give complete information for standards in general use. Concerning the "Jarno" taper the American Machinists' Handbook says: "While the majority of American tool builders use the Brown & Sharpe taper in their milling machine spindles and the Morse taper in their lathes, a number of firms, among them the Pratt and Whitney Company, Hartford, Conn., and the Norton Grinding Company, Worcester, Mass., have adopted the "Jarno" taper . . . In this system the taper of which is 0.6 inch per foot or 1 in 20, the number of the taper is the key by which all the dimensions are immediately determined without the necessity even of referring to the table. That is, the number of the taper is the number of tenths of an inch in diameter at the small end, the number of eighths of an inch at the large end, and the number of halves of an inch in length or depth. For example the No. 6 taper is six-eighths (¾) inch diameter at large end, six-tenths (6/10) diameter at the small end and six halves (three inches) in length. . . ."

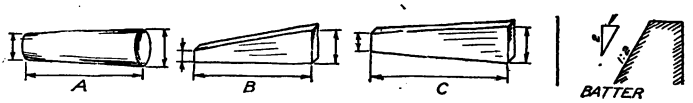

Brown & Sharpe Tapers								Morse Tapers			
Number of taper	Diameter at small end	Diameter at large end	Length	Number of taper	Diameter at small end	Diameter at large end	Length	Number of taper	Diameter at small end	Diameter at large end	Length
1	.20	.239	15/16	9	.90	1.067	4	0	.252	.356	2
2	.25	.299	1 3/16	10	1.0446	1.289	5 11/16	1	.369	.475	2⅛
3	.312	.395	2	11	1.25	1.531	6¾	2	.572	.700	2 9/16
4	.35	.402	1¼	12	1.50	1.797	7⅛	3	.778	.938	3 9/16
5	.45	.523	1¾	13	1.75	2.073	7¾	4	1.02	1.231	4 1/16
6	.50	.599	2⅜	14	2.00	2.344	8¼	5	1.475	1.748	5 3/16
7	.60	.725	3	15	2.25	2.615	8¾	6	2.116	2.494	7¼
8	.75	.898	3 9/16	16	2.50	2.885	9¼	7	2.75	3.27	10

Dimensions of U. S. Standard Bolts and Nuts

Diam. of bolt	Thrd's per inch	Diam. at root of thread	Area at root of thread	Distance across flats	Distance across corners		Thickness	
					Hexagon	Square	Nut	Head
1/4"	20	.185	.026	7/16"	31/64"	11/32"	1/4"	1/4"
5/16"	18	.241	.045	1/2"	9/16"	23/64"	5/16"	5/16"
3/8"	16	.294	.068	9/16"	41/64"	13/32"	3/8"	3/8"
7/16"	14	.345	.093	5/8"	23/32"	1 7/64"	7/16"	7/16"
1/2"	13	.400	.126	3/4"	1 1/64"	1 1/2"	1/2"	7/16"
9/16"	12	.454	.162	13/16"	1 5/64"	1 5/32"	9/16"	9/16"
5/8"	11	.507	.202	15/16"	1 11/64"	1 5/16"	5/8"	5/8"
3/4"	10	.620	.302	1 1/8"	1 19/64"	1 11/16"	3/4"	3/4"
7/8"	9	.731	.420	1 5/16"	1 45/64"	2 1/32"	7/8"	13/16"
1"	8	.838	.551	1 1/2"	1 3/4"	2 11/32"	1"	15/16"
1 1/8"	7	.940	.693	1 11/16"	2 1/32"	2 3/16"	1 1/8"	1 1/16"
1 1/4"	7	1.065	.889	2"	2 5/16"	2 11/32"	1 1/4"	1"
1 3/8"	6	1.159	1.054	2 1/16"	2 11/32"	3 1/32"	1 3/8"	1 1/32"
1 3/8"	6	1.284	1.293	2 1/8"	2 1/4"	3 11/64"	1 3/8"	1 1/16"
1 1/2"	5	1.490	1.744	2 1/4"	3 1/16"	3 11/16"	1 1/2"	1 1/8"
2"	4 1/2	1.711	2.300	3 1/8"	3 11/16"	4 11/16"	2"	1 5/16"

Dimensions of S. A. E. Standard Bolts and Nuts

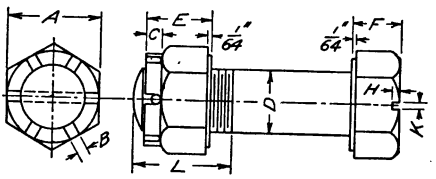

D	Threads	A	B	C	E	F	H	K	L
1/4	28	3/8	5/64	3/32	9/32	3/16	3/32	1/16	3/8
5/16	24	1/2	5/64	3/32	21/64	15/64	7/64	1/16	15/32
3/8	24	9/16	1/8	1/8	13/32	9/32	1/8	3/32	9/16
7/16	20	11/16	1/8	1/8	29/64	21/64	1/8	3/32	21/32
1/2	20	3/4	1/8	3/16	9/16	3/8	1/8	3/32	3/4
9/16	18	7/8	5/32	3/16	33/64	27/64	1/8	3/32	27/32
5/8	18	15/16	5/32	1/4	37/64	15/32	1/8	3/32	15/16
11/16	16	1	5/32	1/4	41/64	33/64	1/8	3/32	1 1/32
3/4	16	1 1/8	5/32	1/4	13/16	9/16	1/8	3/32	1 1/8
7/8	14	1 1/4	5/32	1/4	29/32	21/32	1/8	3/32	1 5/16
1	14	1 7/16	5/32	1/4	1	3/4	1/8	3/32	1 1/2

Dimensions of Cap Screws

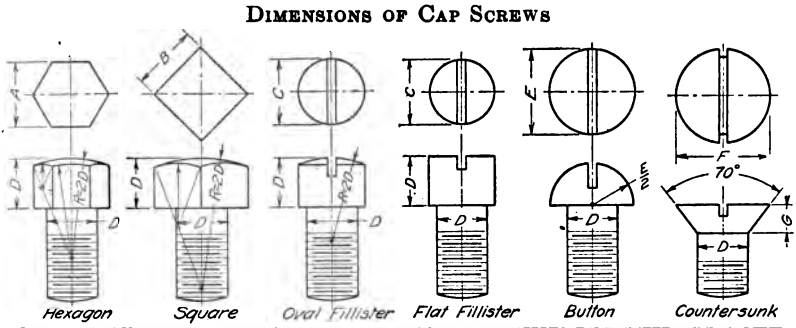

D	$\frac{1}{4}$	$\frac{5}{16}$	$\frac{3}{8}$	$\frac{7}{16}$	$\frac{1}{2}$	$\frac{9}{16}$	$\frac{5}{8}$	$\frac{3}{4}$	$\frac{7}{8}$	1	$1\frac{1}{8}$	$1\frac{1}{4}$	$1\frac{3}{8}$	$1\frac{1}{2}$
A	..	..	$\frac{7}{16}$	$\frac{1}{2}$	$\frac{9}{16}$	$\frac{5}{8}$	$\frac{3}{4}$	$\frac{13}{16}$	$\frac{7}{8}$	1	$1\frac{1}{8}$	$1\frac{1}{4}$	$1\frac{3}{8}$	$1\frac{1}{2}$
B	..	..	$\frac{3}{8}$	$\frac{7}{16}$	$\frac{1}{2}$	$\frac{9}{16}$	$\frac{5}{8}$	$\frac{11}{16}$	$\frac{3}{4}$	$\frac{7}{8}$	$1\frac{1}{8}$	$1\frac{1}{4}$	$1\frac{3}{8}$	$1\frac{1}{2}$
C	$\frac{3}{16}$	$\frac{1}{4}$	$\frac{3}{8}$	$\frac{7}{16}$	$\frac{9}{16}$	$\frac{5}{8}$	$\frac{3}{4}$	$\frac{13}{16}$	$\frac{7}{8}$	1	$1\frac{1}{8}$	$1\frac{1}{4}$		
E	$\frac{7}{32}$	$\frac{5}{16}$	$\frac{7}{16}$	$\frac{9}{16}$	$\frac{5}{8}$	$\frac{3}{4}$	$\frac{13}{16}$	$\frac{15}{16}$	1	$1\frac{1}{4}$				
F	$\frac{1}{4}$	$\frac{3}{8}$	$\frac{15}{32}$	$\frac{5}{8}$	$\frac{3}{4}$	$\frac{13}{16}$	$\frac{7}{8}$	1	$1\frac{1}{8}$	$1\frac{3}{8}$				
G	$\frac{3}{32}$	$\frac{9}{64}$	$\frac{5}{32}$	$\frac{7}{32}$	$\frac{17}{64}$	$\frac{17}{64}$	$\frac{17}{64}$	$\frac{5}{16}$	$\frac{23}{64}$	$\frac{7}{16}$				

Dimensions of Machine Screws
(From A. S. M. E. Std.)

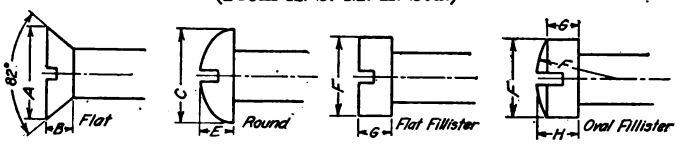

No.	Diameter	Threads	A	B	C	E	F	G	H
0	.060	80	.112	.030	.106	.042	.0894	.0376	.0496
1	.073	72	.138	.037	.130	.051	.1107	.0461	.0609
2	.086	64	.164	.045	.154	.060	.1320	.0548	.0725
3	.099	56	.190	.052	.178	.069	.1530	.0633	.0838
4	.112	48	.216	.060	.202	.078	.1747	.0719	.0953
5	.125	44	.342	.067	.226	.087	.1960	.0805	.1068
6	.138	40	.268	.075	.250	.097	.2170	.0890	.1180
7	.151	36	.294	.082	.274	.106	.2386	.0976	.1296
8	.164	36	.320	.090	.298	.115	.2599	.1062	.1410
9	.177	32	.346	.097	.322	.124	.2813	.1148	.1524
10	.190	30	.372	.105	.346	.133	.3026	.1234	.1639
12	.216	28	.424	.120	.394	.151	.3452	.1405	.1868
14	.242	24	.476	.135	.443	.169	.3879	.1577	.2097
16	.268	22	.528	.150	.491	.188	.4305	.1748	.2325
18	.294	20	.580	.164	.539	.206	.4731	.1920	.2554
20	.320	20	.632	.179	.587	.224	.5158	.2092	.2783
22	.346	18	.684	.194	.635	.242	.5584	.2263	.3011
24	.372	16	.736	.209	.683	.260	.6010	.2435	.3240
26	.398	16	.788	.224	.731	.279	.6437	.2606	.3469
28	.424	14	.840	.239	.779	.297	.6863	.2778	.3698
30	.450	14	.892	.254	.827	.315	.7290	.2950	.3927

Dimensions of Standard Steel and Wrought Iron Pipe

Nominal inside diameter	Actual outside diameter	Actual inside diameter	Internal area	Thrd's per inch	Dist. pipe enters	Actual inside diam.	
						Extra heavy	Double extra
⅛	.405	.270	.057	27	1/4	.205	
¼	.540	.364	.104	18	7/16	.294	
⅜	.675	.494	.191	18	23/32	.421	
½	.840	.623	.304	14	¾	.542	.244
¾	1.05	.824	.533	14	29/32	.736	.422
1	1.315	1.048	.861	11½	1	.951	.587
1¼	1.66	1.38	1.496	11½	1 5/32	1.272	.885
1½	1.9	1.61	2.036	11½	1 5/16	1.494	1.088
2	2.375	2.067	3.356	11½	1 11/32	1.933	1.491
2½	2.875	2.468	4.78	8	1 7/16	2.315	1.755
3	3.5	3.067	7.383	8	1 11/16	2.892	2.284
3½	4	3.548	9.887	8	1	3.358	2.716
4	4.5	4.026	12.73	8	1 1/16	3.818	3.136
4½	5	4.508	15.961	8	1 1/16	4.28	3.564
5	5.563	5.045	19.986	8	1 1/16	4.813	4.063
6	6.625	6.065	28.89	8	1½	5.751	4.875
7	7.625	7.023	38.738	8	1½	6.625	5.875
8	8.625	7.982	50.027	8	1 1/16	7.625	6.875
9	9.625	8.937	62.72	8	1 1/16	8.625	
10	10.75	10.019	78.823	8	1 1/16	9.75	

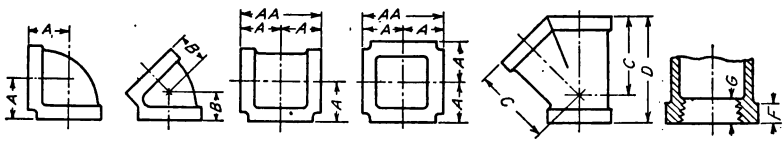

Walworth Co. Standard Cast Iron Fittings
Dimensions of Cast Iron Pipe Fittings

Size of pipe Inches	A Inches	A–A Inches	B Inches	C Inches	D Inches	E Inches	F Inches	G Inches
¼	3/8	1½	7/16	...	...	1	¼	3/8
⅜	7/16	1¾	9/16	1 7/16	2 1/16	1⅛	5/16	7/16
½	1 1/16	2⅛	11/16	1⅞	2 9/16	1 7/16	⅜	½
¾	1 5/16	2⅝	13/16	2 1/16	2¾	1¾	7/16	9/16
1	1½	3	15/16	2¼	3¼	2 1/16	½	⅝
1¼	1 13/16	3⅝	1 1/16	3	3¾	2½	9/16	11/16
1½	2	4	1 3/16	3¼	4¾	2¾	⅝	13/16
2	2½	4¾	1½	4	5½	3½	11/16	⅞
2½	2⅞	5¾	1⅝	5	6 13/16	4⅛	13/16	1
3	3 5/16	6⅝	1⅞	5⅝	7⅛	4¾	15/16	1
3½	3 11/16	7⅜	2 1/16	6⅜	8¾	5¼	1	1 1/16
4	4	8	2¼	7⅛	9¾	6	1 1/16	1⅛
4½	4 7/16	8⅞	2 7/16	7⅞	10½	6 9/16	1⅛	1¼
5	4 11/16	9⅜	2 9/16	8½	11 5/16	7 1/16	1⅛	1¼
6	5 5/16	10⅝	2 13/16	9 15/16	13⅛	8⅛	1⅛	1⅜

Decimal Equivalents of Fractions of an Inch

1/64 = .015625	17/64 = .265625	33/64 = .515625	49/64 = .765625
1/32 = .03125	9/32 = .28125	17/32 = .53125	25/32 = .78125
3/64 = .046875	19/64 = .296875	35/64 = .546875	51/64 = .796875
1/16 = .0625	5/16 = .3125	9/16 = .5625	13/16 = .8125
5/64 = .078125	21/64 = .328125	37/64 = .578125	53/64 = .828125
3/32 = .09375	11/32 = .34375	19/32 = .59375	27/32 = .84375
7/64 = .109375	23/64 = .359375	39/64 = .609375	55/64 = .859375
1/8 = .125	3/8 = .375	5/8 = .625	7/8 = .875
9/64 = .140625	25/64 = .390625	41/64 = .640625	57/64 = .890625
5/32 = .15625	13/32 = .40625	21/32 = .65625	29/32 = .90625
11/64 = .171875	27/64 = .421875	43/64 = .671875	59/64 = .921875
3/16 = .1875	7/16 = .4375	11/16 = .6875	15/16 = .9375
13/64 = .203125	29/64 = .453125	45/64 = .703125	61/64 = .953125
7/32 = .21875	15/32 = .46875	23/32 = .71875	31/32 = .96875
15/64 = .234375	31/64 = .484375	47/64 = .734375	63/64 = .984375
1/4 = .25	1/2 = .5	3/4 = .75	1 = 1.0

Metric Equivalents

Mm. to inches				Inches to mm.			
Mm.	In.	Mm.	In.	In.	Mm.	In.	Mm.
1	.0394	17	.6693	1/32	.79	17/32	13.49
2	.0787	18	.7087	1/16	1.58	9/16	14.28
3	.1181	19	.7480	3/32	2.38	19/32	15.08
4	.1575	20	.7874	1/8	3.17	5/8	15.87
5	.1968	21	.8268	5/32	3.96	21/32	16.66
6	.2362	22	.8661	3/16	4.76	11/16	17.46
7	.2756	23	.9055	7/32	5.55	23/32	18.25
8	.3150	24	.9449	1/4	6.34	3/4	19.04
9	.3543	25	.9843	9/32	7.14	25/32	19.84
10	.3937	26	1.0236	5/16	7.93	13/16	20.63
11	.4331	27	1.0630	11/32	8.73	27/32	21.43
12	.4724	28	1.1024	3/8	9.52	7/8	22.22
13	.5118	29	1.1417	13/32	10.31	29/32	23.01
14	.5512	30	1.1811	7/16	11.11	15/16	23.81
15	.5906	31	1.2205	15/32	11.90	31/32	24.60
16	.6299	32	1.2598	1/2	12.69	1	25.39

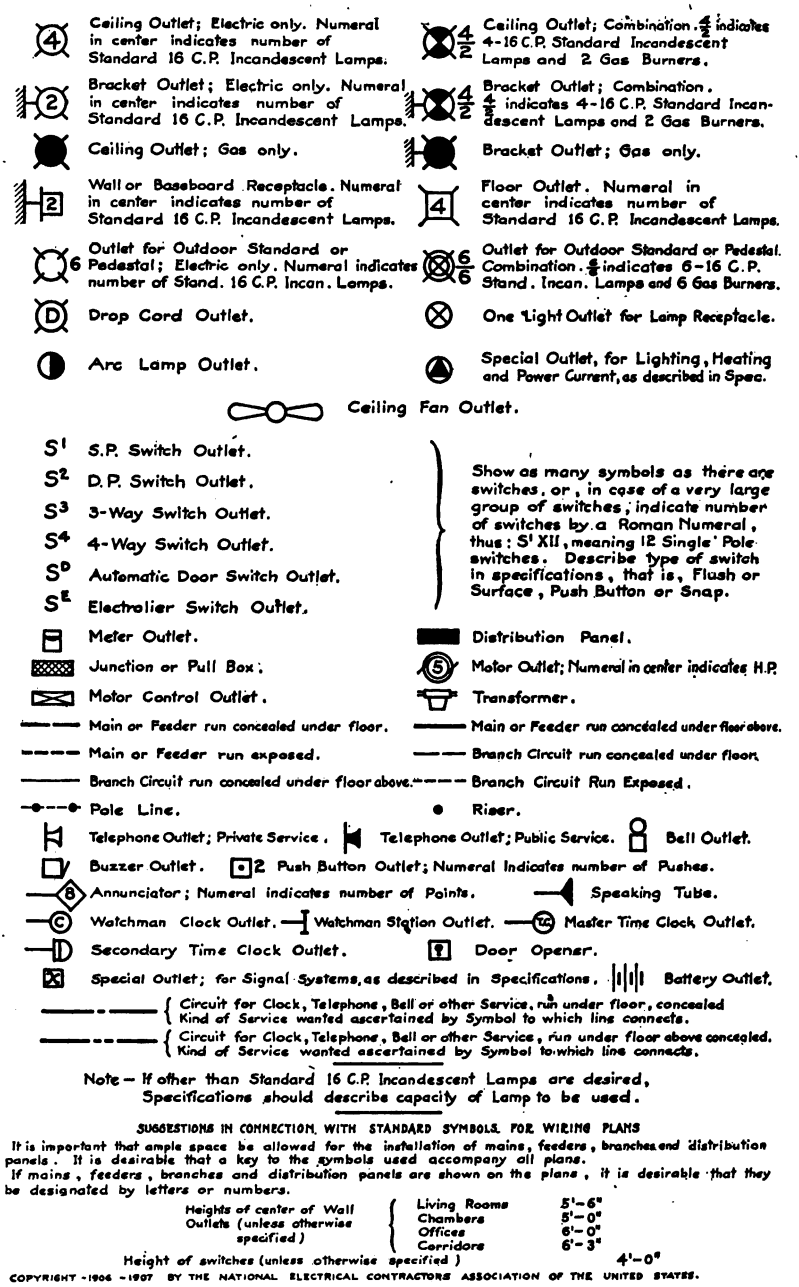

Note — If other than Standard 16 C.P. Incandescent Lamps are desired, Specifications should describe capacity of Lamp to be used.

SUGGESTIONS IN CONNECTION WITH STANDARD SYMBOLS FOR WIRING PLANS

It is important that ample space be allowed for the installation of mains, feeders, branches and distribution panels. It is desirable that a key to the symbols used accompany all plans.

If mains, feeders, branches and distribution panels are shown on the plans, it is desirable that they be designated by letters or numbers.

Heights of center of Wall Outlets (unless otherwise specified)		
	Living Rooms	5'-6"
	Chambers	5'-0"
	Offices	6'-0"
	Corridors	6'-3"

Height of switches (unless otherwise specified) 4'-0"

COPYRIGHT -1906 -1907 BY THE NATIONAL ELECTRICAL CONTRACTORS ASSOCIATION OF THE UNITED STATES.

FIG. 552.—Standard symbols for wiring plans.

Electrical Symbols.—Symbols for the diagrammatic representation of electrical apparatus and construction have not all been standardized, and various modifications will be found. Those given in Fig. 553 are simple forms easily understood and many of which are in general use. For patent drawings, however, the "Rules of Practice," which illustrate eighty-nine required symbols, should be referred to.

The standard wiring symbols of the National Electrical Contractors Association are given on the opposite page.

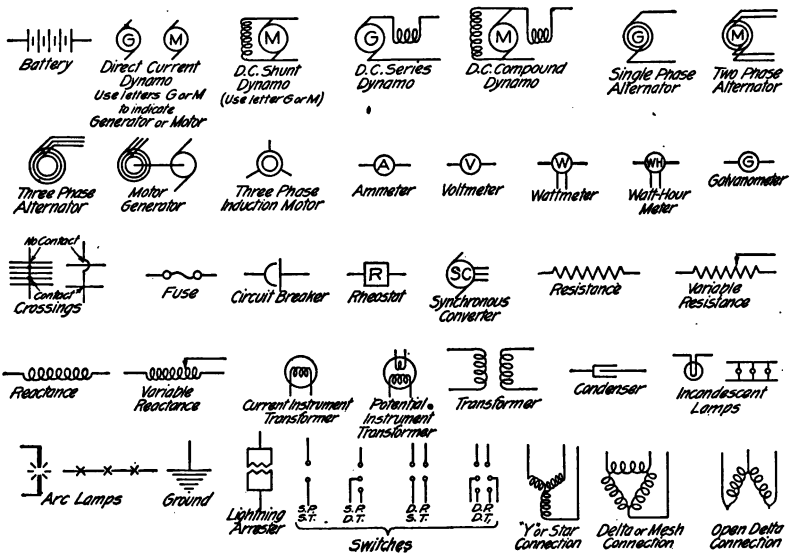

FIG. 553.—Electric symbols.

Symbols for Colors.—Line symbols for the representation of colors were first used in heraldry, under the heraldic names of *gules*—red, *azure*—blue, *vert*—green, *purpure*—purple, *sable*—black, *tenny*—tawny, *sanguine*—dark red, *argent*—silver, and *or*—gold, and these have become the universal standard in all kinds of drawing. It is occasionally necessary on a black and white drawing to indicate the required colors of a fabric or design, as in the device illustrated in Fig. 59. This is notably true in patent office drawing, as mentioned on page 295. The symbols of FIG. 554 are the patent office standards, and, with the exception of orange, those used in heraldry.

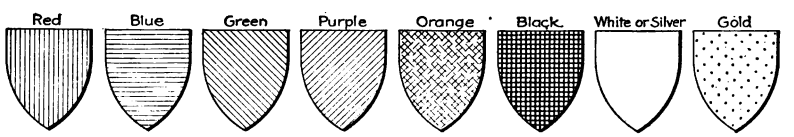

FIG. 554.—Symbols for colors.

Symbols for Materials.—Symbols for designating various materials in section as recommended by a committee of the American Society of Mechanical Engineers are given in Fig. 555. They were designed to avoid using different weights of lines. A part of the codes of government standards of the Bureau of Steam Engineering and the Bureau of Construction U. S. N., is shown in Fig. 556. Cast iron, cast steel, glass and liquid are the same as the A.S.M.E. symbols. The government requires the use of its own symbols on assembly drawings submitted by bidders.

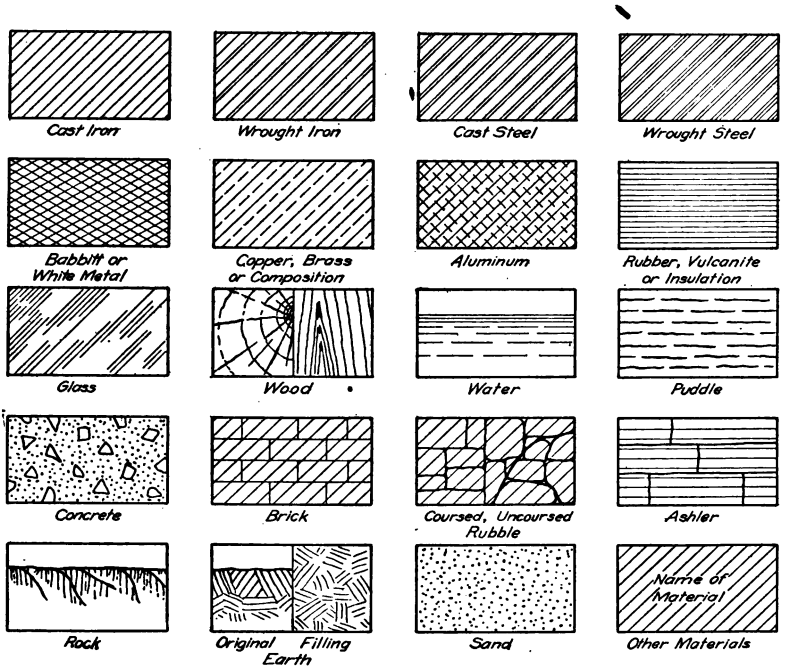

FIG. 555.—Symbols for materials in section, A.S.M.E.

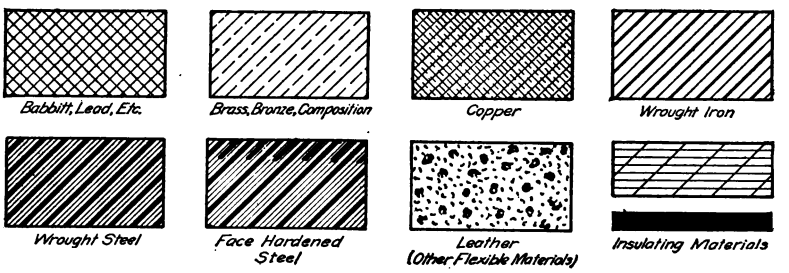

FIG. 556.—Symbols for materials in section, U. S. Govt.

Commercial Sizes.—The following notes give the commercial methods of specifying sizes of the items in the list. The material must, of course, always be specified.

Belting.—Give width and thickness.

Chain.—Give diameter of rod used.

Electrical Conduit.—Same as pipe.

Expansion Bolts.—Give diameter of bolt not of casing.

Leather Fillets (for patterns).—Designated by numbers corresponding to the radii in sixteenths, thus No. 2 is $\frac{1}{8}''$ radius.

Machine Chains.—Give pitch, c. to c. of rivets and width inside for block or roller type and outside for rocker joint type.

Nails (common).—Give size by number with letter *d*, as 10*d* (ten-penny = 10 lb. per thousand.)

Pipe.—Give nominal inside diameter.

R. R. Rails.—Give height of section and weight per yard.

Rolled Steel Shapes.—Give name, essential dimensions and weight per foot.

Rope.—Give largest diameter.

Shafting.—The best practice is to give the actual diameter.

Sheet Metal.—Give thickness by gage number, or in thousandths of an inch (for $\frac{3}{16}''$ and over, give thickness in fractions).

Split Cotter.—Give length of straight part.

Springs.—Helical, give outside diameter, gage of wire, and coils per inch when free.

Taper Pins.—Give number, or length and diameter at large end.

Tapered Pieces.—Give size at small end, and taper per foot.

Tubing.—Give outside diameter and thickness.

Washers.—If standard, give diameter of bolt or screw only.

Wire.—Give diameter by gage number or in thousandths of an inch.

Wire Cloth.—Give number of meshes per lineal inch, and gage of wire.

Wood Screws.—Give length, diameter by number, and kind of head.

Special.—Manufactured articles or fittings, give manufacturer's name and catalogue number.

INDEX

A

Acme threads, 141
Adhesives, 300
Adjustable head T-square, 8
Air brush, 286
Alignment, test for, 5
Alphabet of lines, 31
Alteneder, Theo., 4
    bottle holder, 17
Angles, isometric, 124
Appendix, 311
Arc, tangent to two lines, 40
    through three points, 40
    to rectify, 41
Architects' scale, 9
Architectural drawing, 244
    books on, 307
    characteristics of, 244
Architectural drawings, kinds of, 245
Arrow heads, 168
Assembly drawings, 161
A. S. M. E. symbols, 318
Auxiliary views, 81
Axes, clinographic, 132, 133
    isometric, 120
    oblique, 128
    reversed, 125
Axonometric projection, 132
    sketching, 225

B

Batter, 311
Beam compasses, 14
Beam detail, 236
Bench press, 209 to 211
Ben Day film, 286
Bibliography, 307
Bill of material, 173
Blue-line prints, 282
Blue printing, 280 to 283
Blue prints, changes on, 282
    from typewriting, 282
    potashing, 281
    to mount, 305
Bolts, 140
    dimensioning, 151, 152
    S. A. E. Std., 149
    to draw, 146, 147, 148
    U. S. Std., 146
Bolts and nuts, dimensions of, 312
Books, 307
Bottle holder, 17
Bow instruments, 26
Braddock triangle, 55
Briggs standard threads, 155
Brilliant line, 292
Bristol board, 12, 294
Broken section, 177
Brown & Sharpe tapers, 311
Brown prints, 282
Building construction, 256
Buttress thread, 141

C

Cabinet drawing, 131
Cameragraph, 283
Cams, 189 to 191
    problems, 206
Cap screws, 150
    dimensions of, 313
Castle nuts, 312
Cautions, 37
Cavalier projection, 127
Celluloid, for copying, 302
Center grinder, 213, 218
Checking, 176
    studies, 209
Circle arc, tangent to two lines, 40
    through three points, 40

Circle, involute of, 48
isometric, 124
oblique, 131
to draw, 25, 36
tangent to, 41
to shade, 289
City plats, 266
Clinographic projection, 132, 133
Cloth mounting, 300
Color symbols, 317
Column details, 257
Commercial practice, 191, 298
sizes, 319
Compasses, beam, 14
manipulation of, 25, 26
needle point adjustment, 25
use of, 24, 25
Concrete, reinforced, 241
Cone, development of, 98, 103
to develop oblique, 104
to shade, 293
Conic sections, 41, 42
Conical helix, 142, 154
Conjugate axes, 45
Connecting rod, 212, 215
end, intersection of, 112
Contour pen, 13
Contours, 268
Conventional sections, 179 to 183
symbols (*see* Symbols).
Copying drawings, 302 to 304
Cornice details, 256
Cotters, 154
Cross hatching, 85, 185, 278
conventional, 318
instruments for, 15, 305
on patent drawings, 295
Cross section paper, sketches on, 224
Cross sections, 177
Crystallography, 133
Cube, isometric, 120
Culture, 271
Curve, diagram, 12
ogee, 40
to ink with circle arcs, 46
use of, 32, 33
Curve pen, 13
Curves, 11, 12
Cycloidal curves, 47
Cylinder, development of, 99, 100, 101
to shade, 292

D

Dam, masonry, 243
Dashpot, 212, 216
Decimal equivalents, 315
Descriptive geometry, 74, 97
books on, 307
Design drawing, 161
Detail drawings, 162
structural, 236
sketch, 225
Details, architectural, 248, 252
column, 257
cornice, 256
foundation, 256
Developed views, 182, 184
Development, by trianguatlion, 103
of cone, 103
of cylinder, 99, 100
of elbow, 100
of hexagonal prism, 99
pyramid, 102
of oblique cone, 104
of octagonal dome, 101
of rectangular pyramid, 102
of right cone, 103
of sphere, 106
of surfaces, 97
of transition piece, 106
of truncated cone, 103
Dimensioning, 166
architectural, 252
bolts and screws, 151
on pictorial drawings, 226, 227
on sketches, 223
rules for, 168
structural drawings, 237, 238
studies, 199 to 201
Dimensions, of bolts and nuts, 312
cap screws, 313
machine screws, 313
pipe fittings, 314
standard pipe, 314
Dimetric projection, 132

Display drawings, 246
maps, 265
Dividers, hairspring, 6
patterns of, 5
proportional, 14, 304
use of, 22
Door symbols, 248
Dotted lines, 31, 79
sections, 179
Dotting pen, 16
Double curved surfaces, 97
to shade, 283
Drafting machine, 16
Drawing, architectural, 244
cabinet, 131
for reproduction, 278, 283
isometric, 120
map, 261
oblique, 128
structural, 233
topographical, 261, 267
Drawing board, 8
glass, 302
steel edge for, 305
Drawing ink, 11
Drawing paper, 12
Drawing pencils, 10
Drawings, cam, 190
display, 246
gear, 187 to 189
masonry pier, 242
patent office, 294 to 297
phantom, 286
pipe, 156, 157
steel structure, 235, 236
to copy, 302 to 304
to preserve, 304
wooden structure, 239, 240
working, 160
Drilled flanges, 181, 182
Drop pen, 14
Duplication, 278

E

Elbow, development of, 100
Electrical symbols, 316, 317
Elevations, architectural, 252
to draw, 258
Ellipse, 42 to 46
approximate four centers, 45
eight centers, 45
concentric circle method, 43
conjugate axes, 45
definition of, 42
parallelogram method, 44
pin and string method, 44
trammel method, 43
Ellipsograph, 44
Engineers' scale, 9
English T-square, 7
Epicycloid, 47, 48
Equivalents, decimal, 315
metric, 315
Erasing, 278
shields, 17
Etchings, zinc, 284
Eureka process, 283
Exercises, lettering, 70 to 72
reading, 138, 139
sketching, 80, 232

F

Farm survey, 263
Fastenings, 140
Faulty lines, 30, 31
Filing, 305
Finish mark, 171
First angle projection, 78, 244
Fits, limits, and, 171
Fittings, pipe, 155, 156
Five-centered arch, 46
Fixatif, 304
Flanges, drilled, 181, 182
Flexible curves, 12
Floating, 300
Floor plans, 247 to 251
Follows, Geo. H., 176
Forms of thread, 140
Formula for blue print paper, 280
Formulas, gear, 187
Foundation details, 256
Fractions, 59, 168
Freehand drawing, 2, 220
French curve, 11
sanding, 306
Frotté, 247

G

Gears, 186 to 189
  problems, 206
Gears and gearing, books on, 307
General drawings, 161
  structural, 234
Geometry, applied, 38
  books on, 307
  descriptive, 74, 97
Glass drawing board, 302
Gore method of development, 107
Graphic statics, book on, 308

H

Hachures, 268
Half sections, 179
  isometric, 127
Half-tone process, 286
Hand books, 308
Headless set screw, 150
Helical springs, 154
Helix, 141, 142
  to draw, 142
Hexagon, to construct, 39
Hill shading, 270
Hot mounting, 301
Hyperbola, 42, 47
Hypocycloid, 47, 48

I

Ink, colored, 278
  drawing, 11
  for printing on cloto, 279
  frozen, 37
  red, 168, 237, 305
  stick, 11
  to remove, 278
Inking, 28, 29
  on tracing cloth, 278
  order of, 166
  shaded drawings, 289
  structural drawings, 237
Ink lines, to remove, 278
Instruments, care of, 37
  exercises for, 34 to 36
  selection of, 3
  use of, 18
Intersections, of connecting rod end, 112
  cylinder and cone, 112
  cylinders, 109
  prism and cone, 110
    and sphere, 110
  prisms, 108
  surfaces, 107
Involute, of a pentagon, 48
  of a circle, 48
Irregular curves, 11
  sanding, 306
Isometric drawing, 120
  to shade, 290
Isometric sketching, 225

J

Janney process, 283
Jarno taper, 311
Jig, drawing study, 213, 219
Joints, riveted, 153

K

Kelsey triangle, 17
Ketchum, M. S., 233
Keys, 153, 154
Knuckle thread, 141
Knurling, to represent, 294

L

Laying out the sheet, 21
Left-handed person, 20
Lettering, 52 to 72
  architectural, 258
  books on, 309
  composition in, 63
  exercises, 70, 72
  map, 275
  materials for, 55
  on structural drawing, 239
  pens, 54
  position of pen for, 56
  single stroke, 53, 54
  spacing lines for, 55

Letters, analysis of, 57 to 60
architects', 68
bold face, light face, 53
commercial gothic, 65, 66
compressed, 53
extended, 53
general proportions, 53
inclined Roman, 69, 70
modern Roman, 66, 68, 69
extended and compressed, 69
old Roman, 67, 68
Reinhardt, 62
Roman, 65, 66
rules for shading Roman, 66
single stroke, 56
capitals, 56
compressed, 63
inclined caps, 60, 61
lower case, 62
spacing of, 63, 64
stump, 70
vertical lower case, 60
Limits and fits, 171
Line, to bisect, 22
to divide geometrically, 38
Line-o-graph, 17
Line shading, 288, 291
rule for, 292
theory of, 291
Lines, alphabet of, 32
contour, 268
conventional forms of, 31
faulty, 30, 31
shade, 288
to divide by trial, 22
to draw parallel, 24
perpendicular, 24
true length of, 84
uses of, 32
Lithography, 287
Locknuts, 149
Logarithmic spiral curves, 12

M

Machine drawing, 160
books on, 309
Machine screws, 150
dimensions of, 313
Map drawing, 261
Mapping pens, 270
Maps, classification of, 261
contour, 269
quadrangle, 274
railroad property, 262
real estate, 265
reproduction of, 287
sewer, 266
shade line, 266
symbols used, 268 to 274
topographical, 267
Masonry section, 241
structures, 240
symbols for, 241
Material list, 173
Materials, commercial sizes of, 319
sketching, 221
symbols for, 247, 318
Measuring, 223
Mechanical drawing, 2
Mechanism, books on, 309
Metric equivalents, 315
system, 172
Milling machine vise, 212, 217
Morse tapers, 311
Mosaic, 246
Mounting paper on cloth, 300

N

Negatives, 282
Non-developable surfaces, 103
Non-isometric lines, 121, 122
Note book sketch, 220
Notes and specifications, 173

O

Oblique projection, 127
sketching, 226
Octagon, to construct, 40
Octagonal dome, development of, 101
Offset construction, 123, 130
Ogee curve, 40
Oil and gas symbols, 272
stones, 298
Old Roman letters, 65
Order of inking, 166
shaded drawings, 289

Order of penciling, 164
Orthographic projection, 73
  definition of, 74
  principles of, 77, 78, 79
  violations of theory, 179
Osborn symbols, 238

P

Pantograph, 303
  suspended, 304
Paper, 12
  blue print, 280
  Bristol board, 12, 294
  cross section, 224
  detail, 13
  drawing, 12
  for patent drawings, 294
  profile, 275, 277
  stretching, 299
  to mount, 300
  Van Dyke, 282
  Weston's ledger, 55
  Whatman's, 12, 246
Parabola, 42, 46, 47
Paste, 301
Patent office drawings, 294 to 297
  size of, 295
Patterns, 97, 113
Payzant pen, 54
Pen, dotting, 16
  to sharpen, 298
  to test, 299
  use of ruling, 28, 29
Pencil, eraser, 12
  for sketching, 221
  position for sketching, 222
  sharpening, 19
Penciling, order of, 164
Pencils, 10
Pens, border, 13
  cautions, 37
  contour, 13
  curve, 13
  dotting, 16
  double, 13
  drop, 14
  lettering, 54
  mapping, 270
Pens, Payzant, 54
  railroad, 13
  rivet, 14
  ruling, 6
Perspective, 73, 74
  angular, 229
  books on, 309
  construction, 227
  parallel, 228
  sketch, to make, 231
  sketching, 227
Phantom drawings, 286
Photographs, reproduction of, 286
Photostat, 283
Pictorial drawing, 119
  triangles for, 306
Pictorial sketching, 225
Pipe, dimensions of, 314
  standard, 155
  threads, 155
Pipe drawings, 156, 157
Pipe fittings, 155, 156
  dimensions of, 314
Piping, book on, 309
Pitch, of gears, 187
Pivot joint, 4, 5
Plans, architectural, 247 to 251
  to draw, 258
Plat of a survey, 262
Plats, city, 266
  contents of, 262
  of subdivisions, 263
Poché, 246
Polygon, to transfer, 39
Preparation for drawing, 19
Preserving drawings, 304
Pricking, 302
Prints, black line, 282
  blue, 280
  blue-line, 282
  brown, 282
  negative, 282
Prism, to develop, 99
  to shade, 291
Prisms, intersection of, 108
Problems, architectural, 259, 260
  bolts, 158
  cams and gears, 206
  curve, 50

Problems, for orthographic sketching, 80
geometrical, 49
helices, 158
intersection and development, 112 to 118
isometric, 134
lettering, 70, 72
oblique, 135
orthographic projection, 86 to 96
pipe, 158, 159
screw threads, 158
sketching, 232
use of instruments, 34, 36
working drawing, 191 to 219
Profile paper, 275
Profiles, 275
Projection, auxiliary, 81
axonometric, 132
clinographic, 132, 133
dimetric, 132
first angle, 78, 244
isometric, 120
oblique, 127
orthographic, 73
trimetric, 132
Proportional dividers, 14, 304
methods, 303
Protractor, 15
Pump, water end of, 212 to 214
Pyramid, to develop, 101

Q

Quadrangle maps, 274

R

Railroad pen, 13
property map, 262
Reading exercises, 138, 139
Record strip, 175
Rectigraph, 283
Reducing glass, 285
Reflected views, 244
Reinforced concrete, 241
reference letters for, 241, 242
Reinhardt, C. W., 62
Relief, symbols for, 272
Rendering, books on, 309
Reproduction, drawings for, 278
Reversed axes, 125
Revolution, 82
Revolved sections, 177
views, 182, 184
Rib, section through, 179
Rivet pen, 14
Riveted joints, 153
Rivets, 152
Osborn symbols, 238
structural, 237, 238
Rondinella triangle, 17
Roof truss, 235, 239
wood, 258
Rubbing, to copy by, 302
Ruled surfaces, 97
Rules of practice, 294, 317
for dimensioning, 168
for oblique drawing, 129
Ruling pens, use of, 28, 29
to sharpen, 298

S

S. A. E. Std. bolts and nuts, 149
dimensions of, 312
Scale, isometric, 120
use for dividing a line, 38, 39
Scales, architects', 9
civil engineers', 9
flat, 10
for architectural drawings, 247, 252
for maps, 266
for structural drawings, 234
list of sizes in use, 27
mechanical engineers', 9
profile, 276
sections of, 10
topographic map, 274
use of, 26, 27
Screw threads, 142
conventional, 144, 145
to draw, 143, 144
Screws, cap, 150
dimensioning, 151, 152
machine, 150
set, 150

Screws, various, 151
wood, 151
Section liner, 15, 305
lining, 85, 278
Sectional views, 85
Sections, 177
architectural, 252
isometric, 127
masonry, 241, 243
reinforced concrete, 242
structural drawing, 237
studies, 202 to 204
symmetrical, 181
through ribs, 179 to 181
Set screws, 150
Sewer maps, 266
Shade line maps, 266
lines, 288
Shades and shadows, books on, 309
Shading a circle, 289
Sharpening a pen, 298
the pencil, 19
Sheet metal, books on, 310
Single curved surfaces, 97
to shade, 293
Single stroke letters, 53
Sketch, dimensioning, 223
to make, 222
Sketching, architectural, 245
oblique, 226
pictorial, 134, 225
technical, 220
Specifications, 173
Sphere, isometric, 125
to develop, 106
to shade, 291
Spiral of Archimedes, 49
Spring bow instruments, 7
cotters, 154
Springs, helical, 154
Squares, enlargement by, 304
Standards, books on, 310
Stick ink, 11
Stretching paper, 299
"Stretchout" line, 99
Structural drawing, 233
arrangement of views, 236, 237
books on, 310
classification, 233
Structural drawing, dimensions, 237, 238
lettering on, 239
practice, 236
scales for, 234
titles, 239
Structures, masonry, 240
timber, 239, 258
Studs, 149
Style, 163
Surface shading, 291
Surfaces, classification of, 97
intersection of, 107
non-developable, 103
Swede pen, 6
Swivel pen, 13
Symbols, color, 317
conventional, 182, 185
culture, 271
door, 248
electrical, 316, 317
for building materials, 247
for materials, 318
for rivets, 238
masonry, 241
oil and gas, 272
relief, 272
topographic, 271
U. S. Government, 318
vegetation, 273
water features, 273
window, 248
wiring, 316

T

T-square, adjustment for, 305
use of, 20
T-squares, 7, 8
Tangent, to draw, 41
Tangents, correct and incorrect, 30
Tapers, 311
Technic, books on, 310
of sketching, 221
Test for alignment, 5
for triangles, 9
Theory, violations of, 179
Threads, forms of, 140
pipe, 155
U. S. Std., 140

Thumb tacks, 10
Timber structures, 239
Tinting, 300
Tipping, 300
Titles, 64, 65
  architectural, 259
  contents of, 175, 259
  design of, 64, 65
  printed, 176, 239, 279
  structural drawing, 239
  working drawing, 175
Topographic symbols, 271
Topographical drawing, 261, 267
  books on, 310
Tracing, 166
  freehand, 279
Tracing cloth, 278
  paper, to mount, 300
Tracings, to clean, 279
  to file, 305
Transition pieces, 106
Transparentizing, 282
Trestle, 240
Triangle, Braddock, 55
  to construct, 39
Triangles, 8
  combination, 17
  double, 306
  test for accuracy, 9
  use of, 23, 24
Triangular scales, 9
Triangulation, 103
Trimetric projection, 132
True length of line, 84

U

Universal drafting machine, 16
U. S. Geological Survey, 274
U. S. Std. bolts and nuts, 146
  dimensions of, 312

V

Van Dyke paper, 282
Vanishing points, 227
Vegetation, 273
Views, developed, 182, 184
  reflected, 244
  revolved, 182, 184
  sectional, 85
Violation of theory, 179
  problems involving, 205
  shade lines, 289

W

Walls, thickness of, 258
Warped surfaces, 97
Water colors, 300
  features, 273
Water-lining, 270
Wax process, 286
Whatman paper, 12, 246
Whitworth thread, 141
Window sections and symbols, 248
Wiring symbols, 316
Wood screws, 151
Wooden building, 256
Working drawings, 160
  architectural, 247
  classes of, 161
  problems, 191 to 219
  structural, 234
  to make, 164
Worm thread, 141

Z

Zange triangle, 17
Zinc etching, 284
Zone method of development, 107

AUG 1 1919

UNIVERSITY OF MICHIGAN
3 9015 06718 1100